CASSETTE TAPE DECK

CT-F2121

KCU, DV, NB, DP

SERVICE MANUAL

PIONEER®

DP model

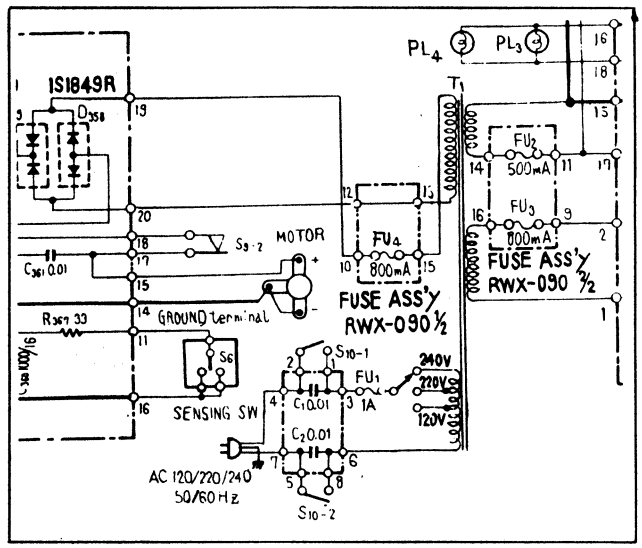

DV model

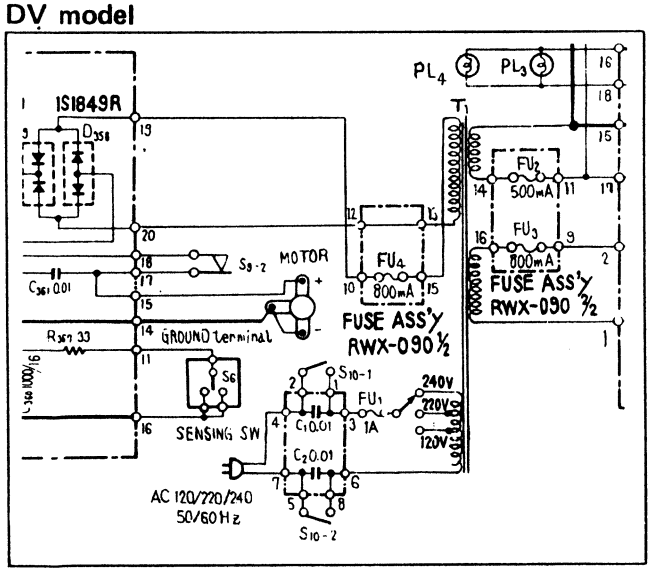

NB model

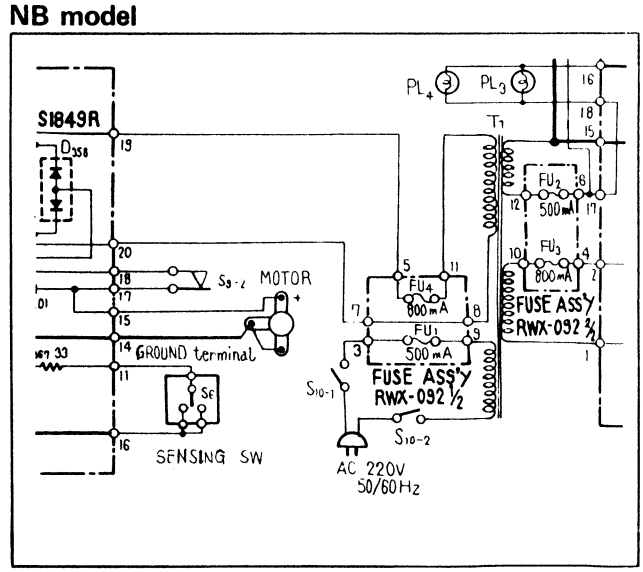

SCHEMATIC DIAGRAMS, P.C. BOARD PATTERNS AND PART

SCHEMATIC DIAGRAMS AND MISCELLANEOUS PARTS

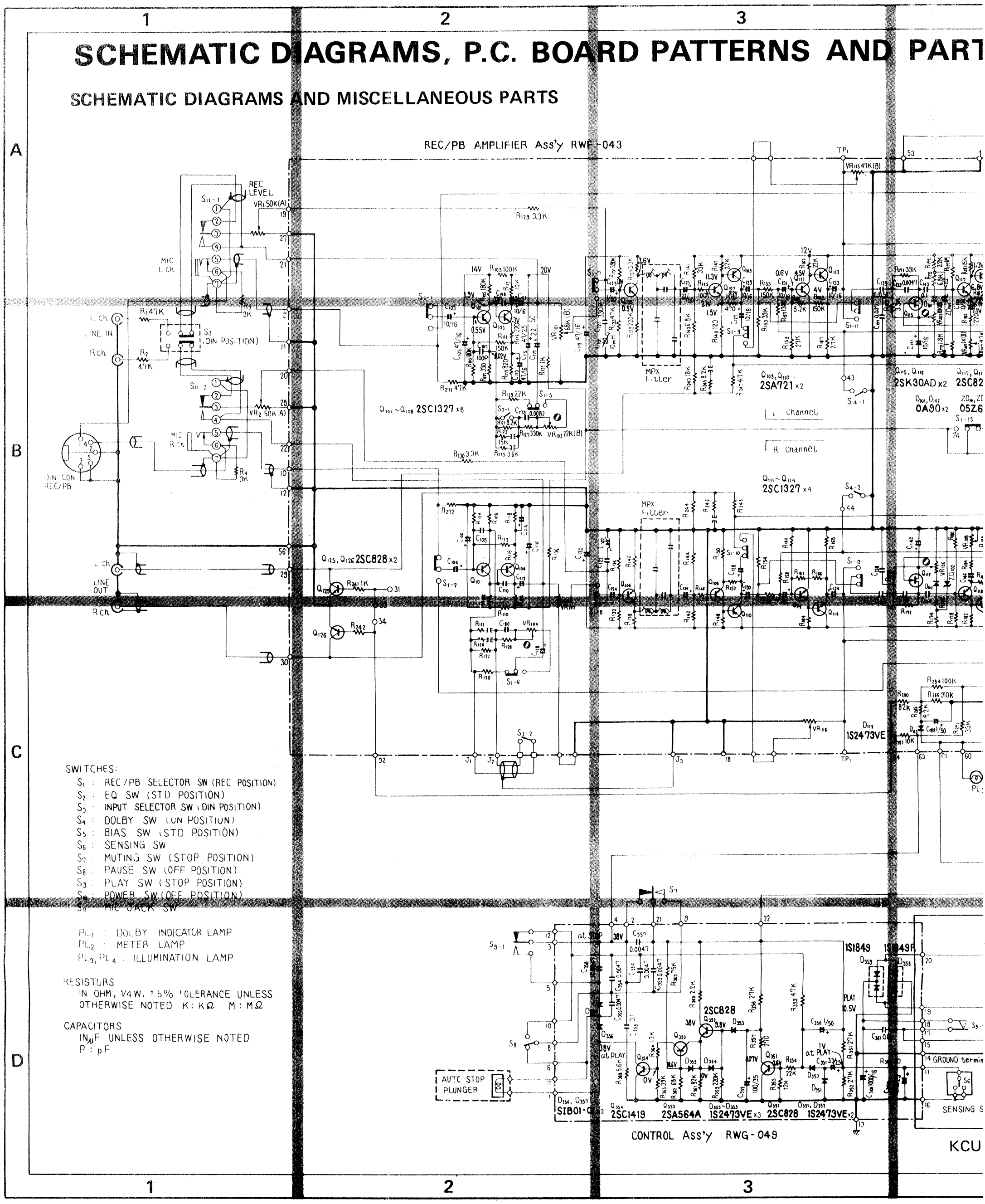

S AND PART LISTS

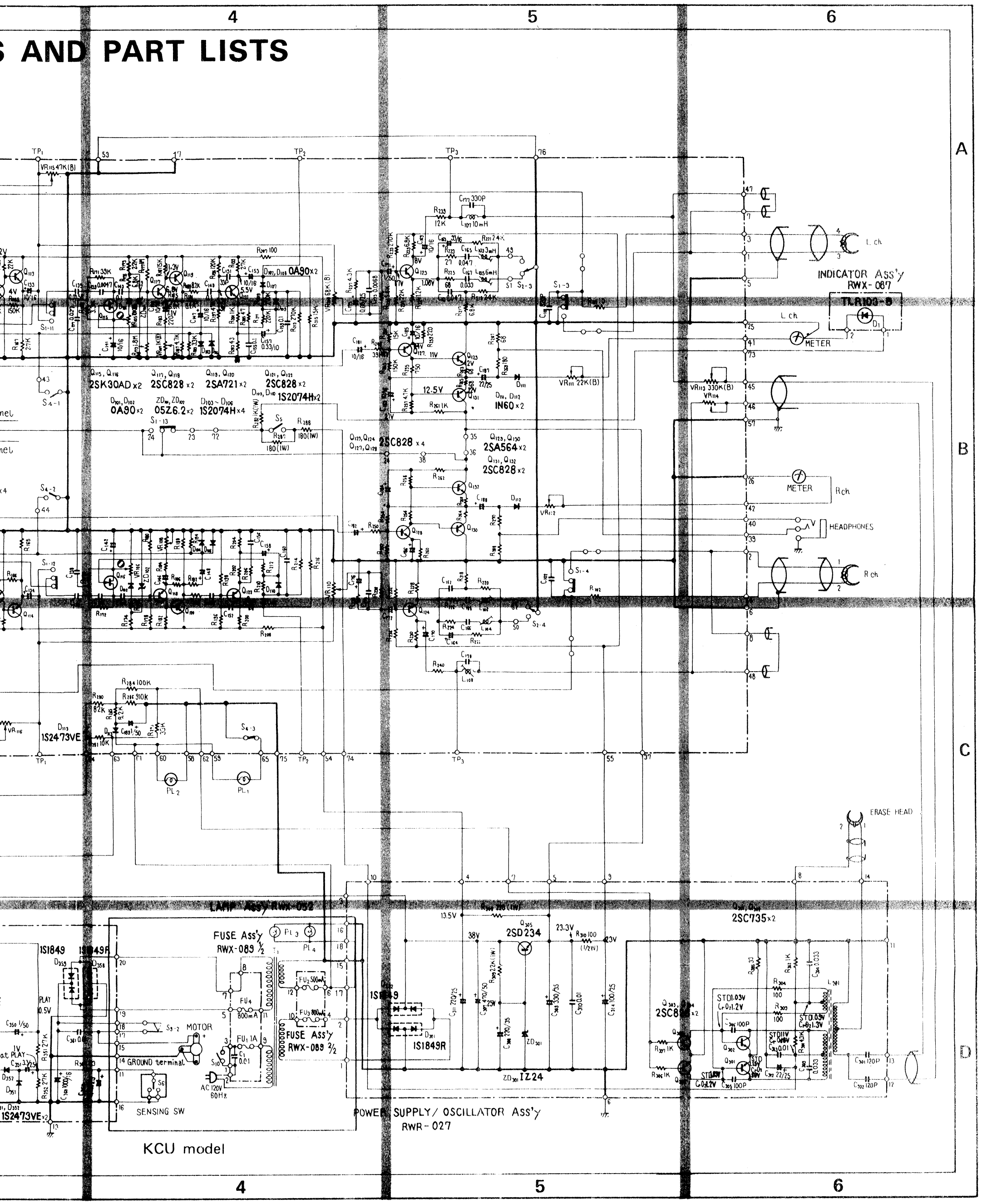

POWER SUPPLY AND O.S.C. ASSEMBLY (RWR-027)

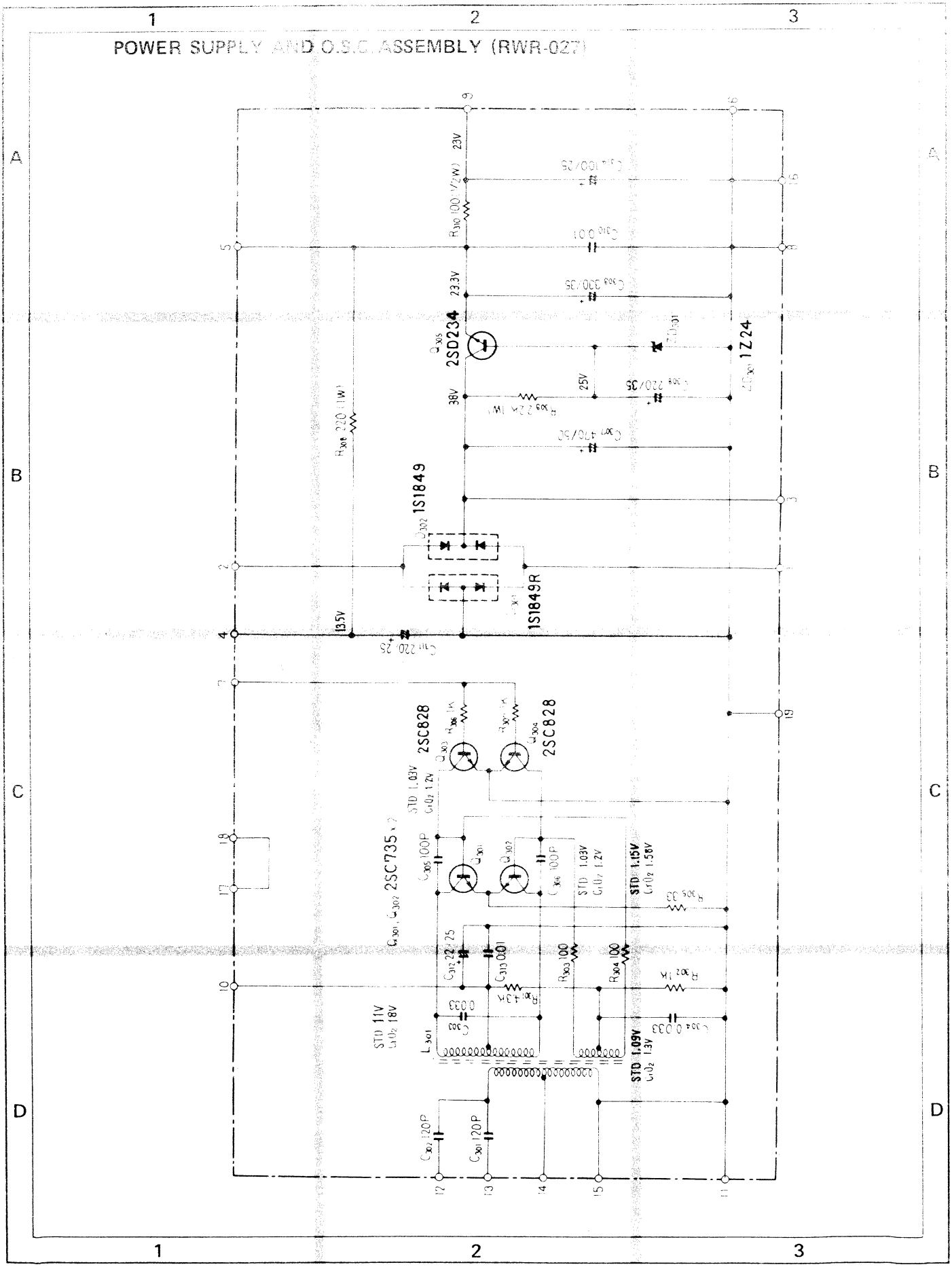

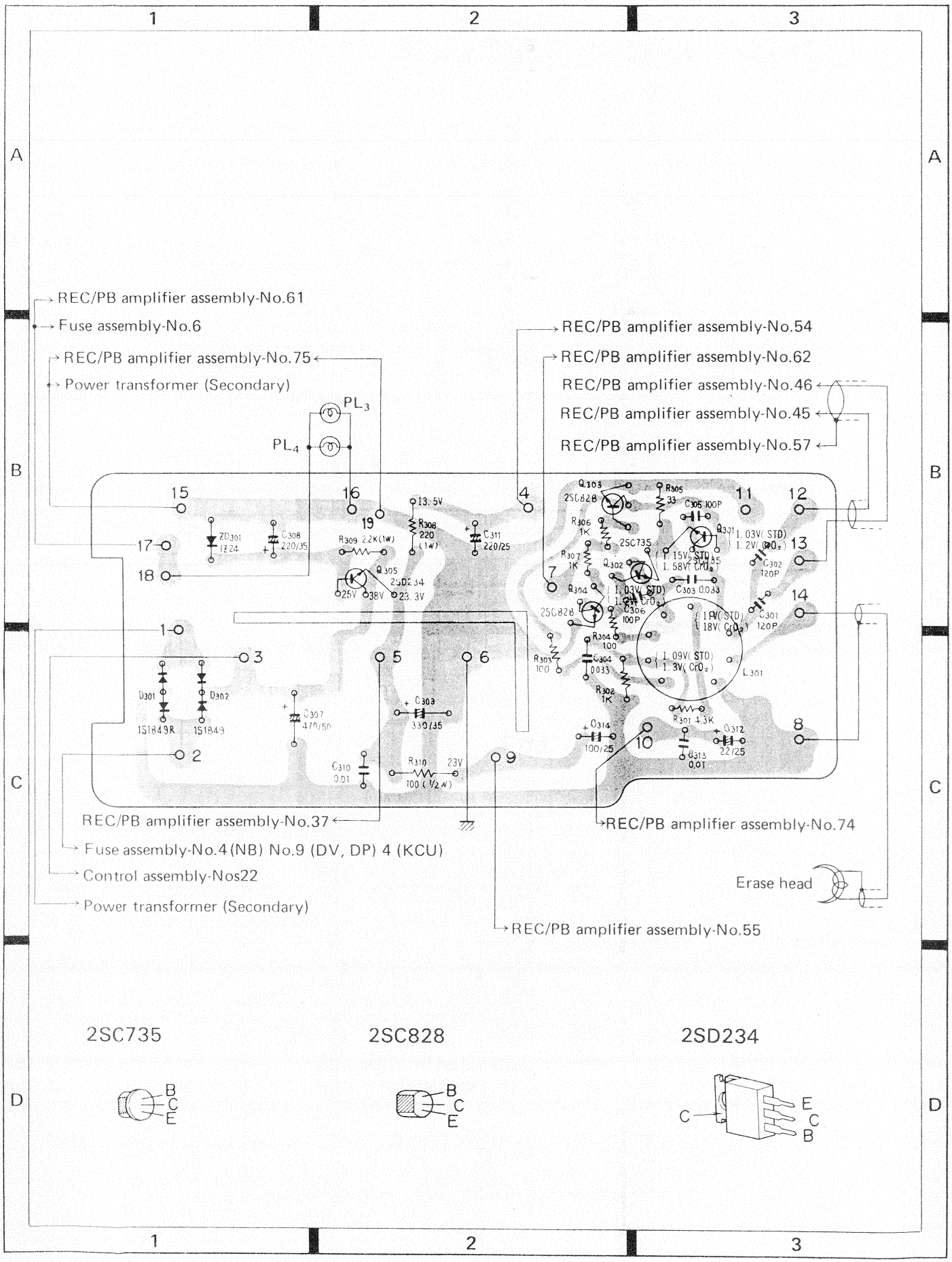
REC/PB amplifier assembly-No.61
Fuse assembly-No.6
REC/PB amplifier assembly-No.75
Power transformer (Secondary)
REC/PB amplifier assembly-No.54
REC/PB amplifier assembly-No.62
REC/PB amplifier assembly-No.46
REC/PB amplifier assembly-No.45
REC/PB amplifier assembly-No.57
PL3
PL4
REC/PB amplifier assembly-No.37
Fuse assembly-No.4 (NB) No.9 (DV, DP) 4 (KCU)
Control assembly-Nos22
Power transformer (Secondary)
REC/PB amplifier assembly-No.74
Erase head
REC/PB amplifier assembly-No.55
2SC735
2SC828
2SD234

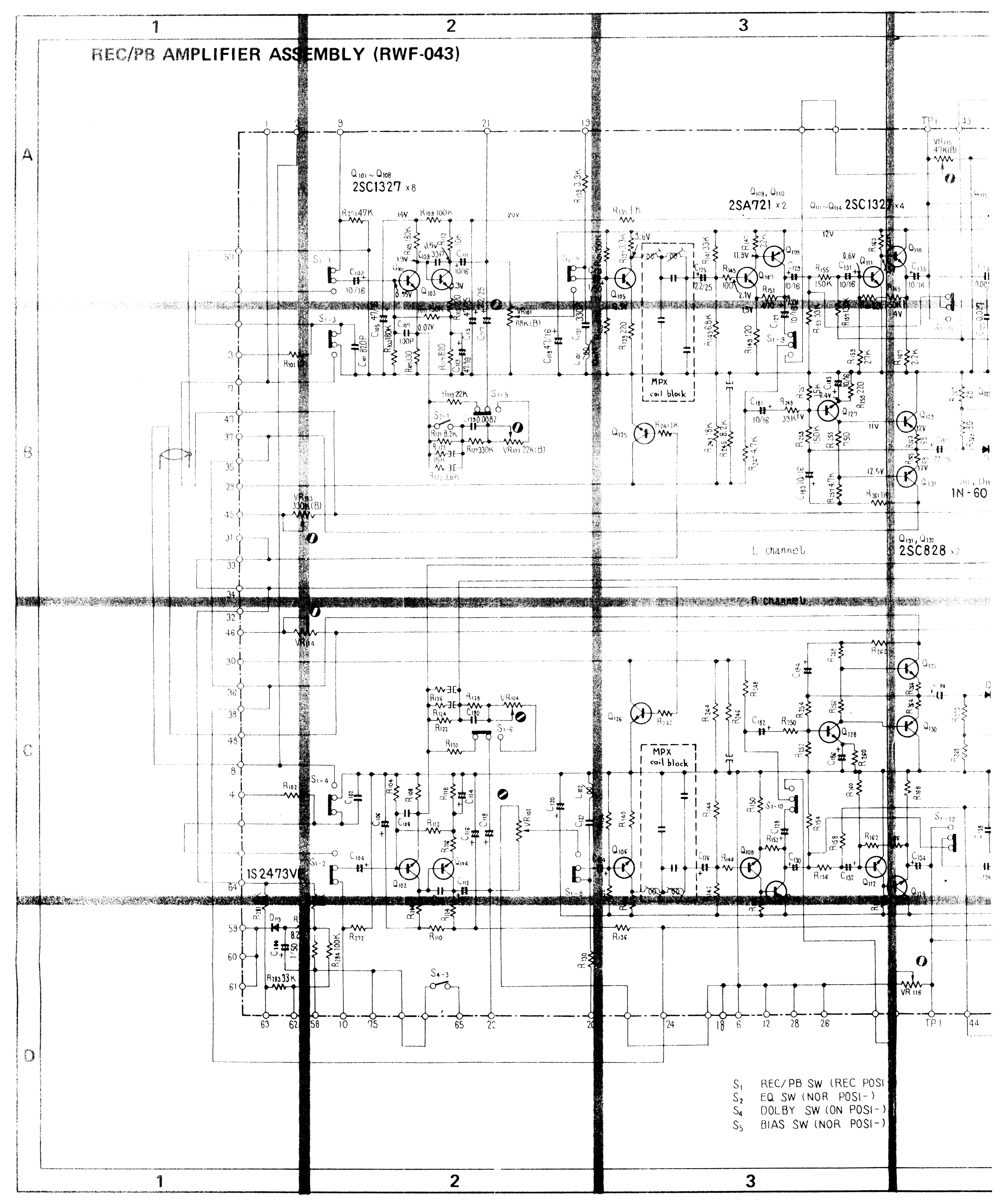
REC/PB AMPLIFIER ASSEMBLY (RWF-043)
Q101 ~ Q108
2SC1327 x8
Q109, Q110
2SA721 x2
Q111~Q114 2SC1327 x4
Q131, Q132
2SC828 x2
L channel
R channel
MPX coil block
MPX coil block
1S2473V
1N-60
S1 REC/PB SW (REC POSI
S2 EQ SW (NOR POSI-)
S4 DOLBY SW (ON POSI-)
S5 BIAS SW (NOR POSI-)

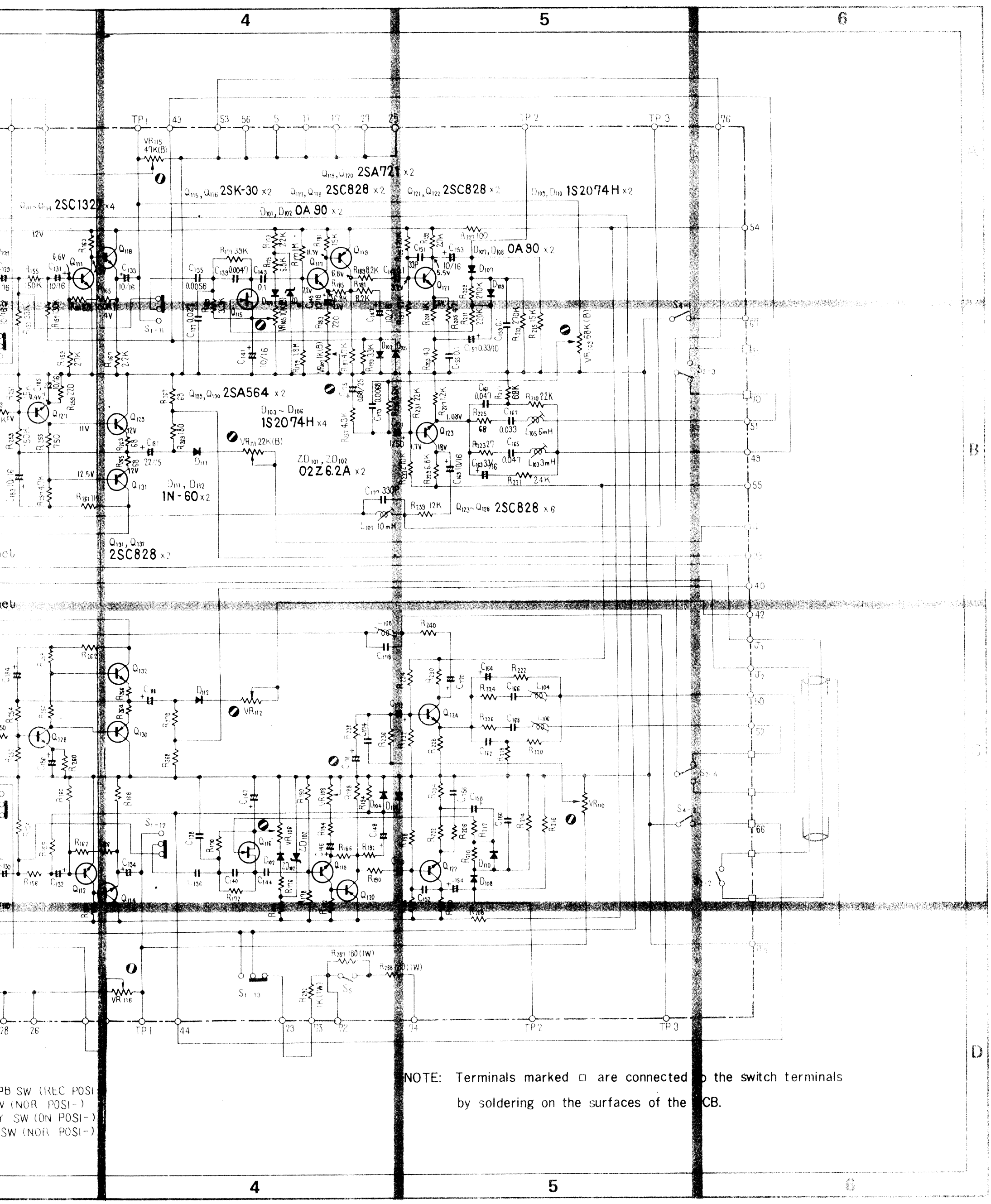

NOTE: Terminals marked □ are connected to the switch terminals by soldering on the surfaces of the PCB.

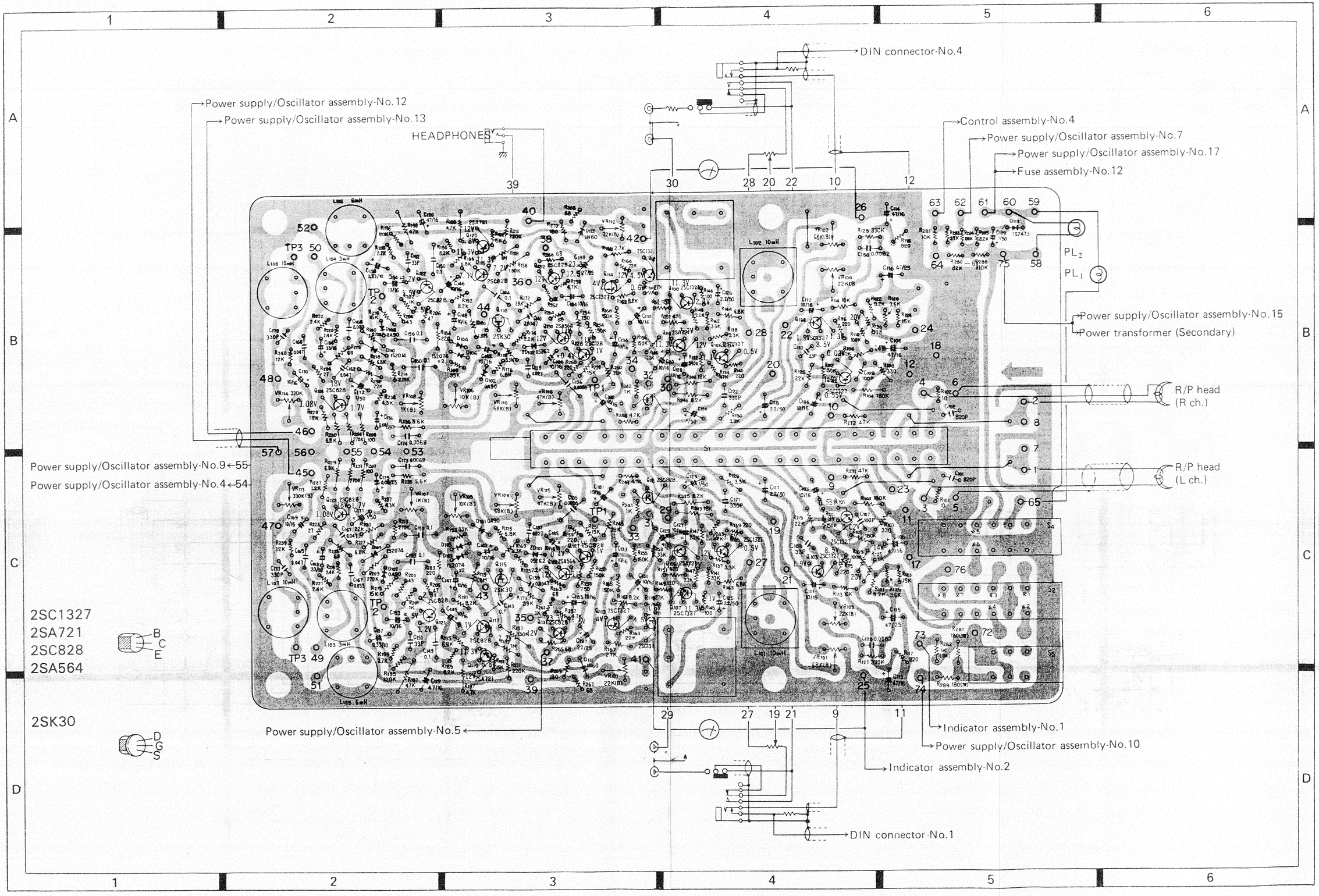
DIN connector-No.4
Power supply/Oscillator assembly-No.12
Power supply/Oscillator assembly-No.13
HEADPHONES
Control assembly-No.4
Power supply/Oscillator assembly-No.7
Power supply/Oscillator assembly-No.17
Fuse assembly-No.12
Power supply/Oscillator assembly-No.15
Power transformer (Secondary)
R/P head (R ch.)
R/P head (L ch.)
Power supply/Oscillator assembly-No.9←55
Power supply/Oscillator assembly-No.4←54
2SC1327
2SA721
2SC828
2SA564
2SK30
Power supply/Oscillator assembly-No.5←
Indicator assembly-No.1
Power supply/Oscillator assembly-No.10
Indicator assembly-No.2
DIN connector-No.1

FUSE BOARD ASSEMBLY

1, KCU model

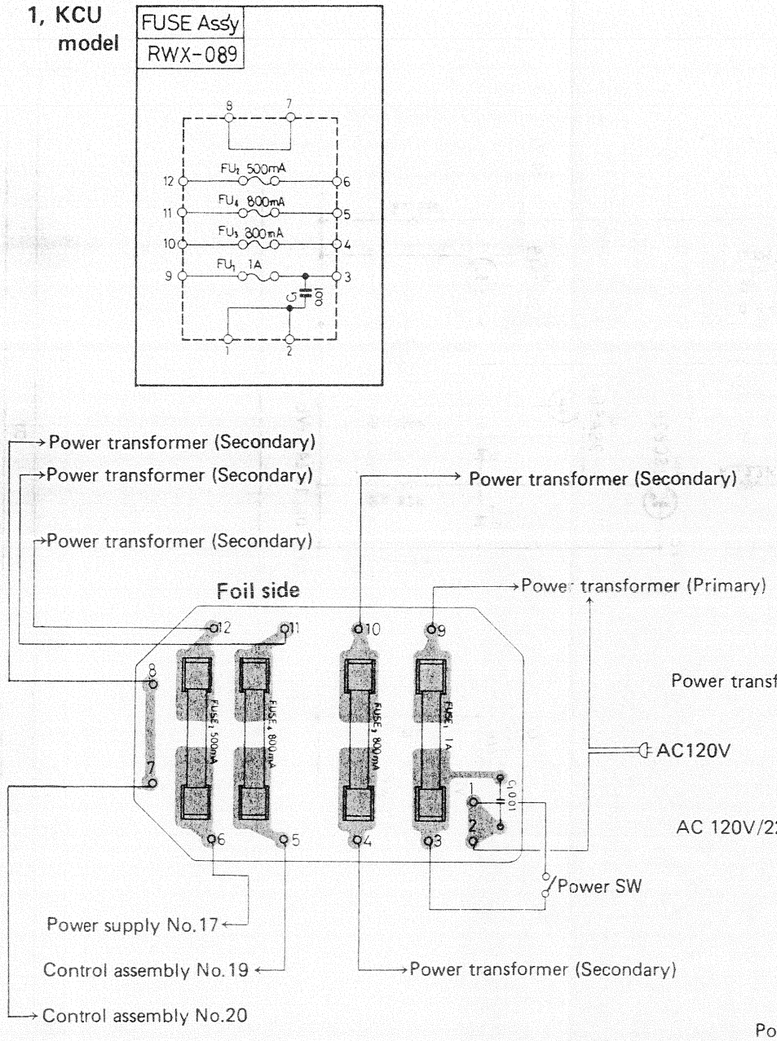

2. DV, DP model

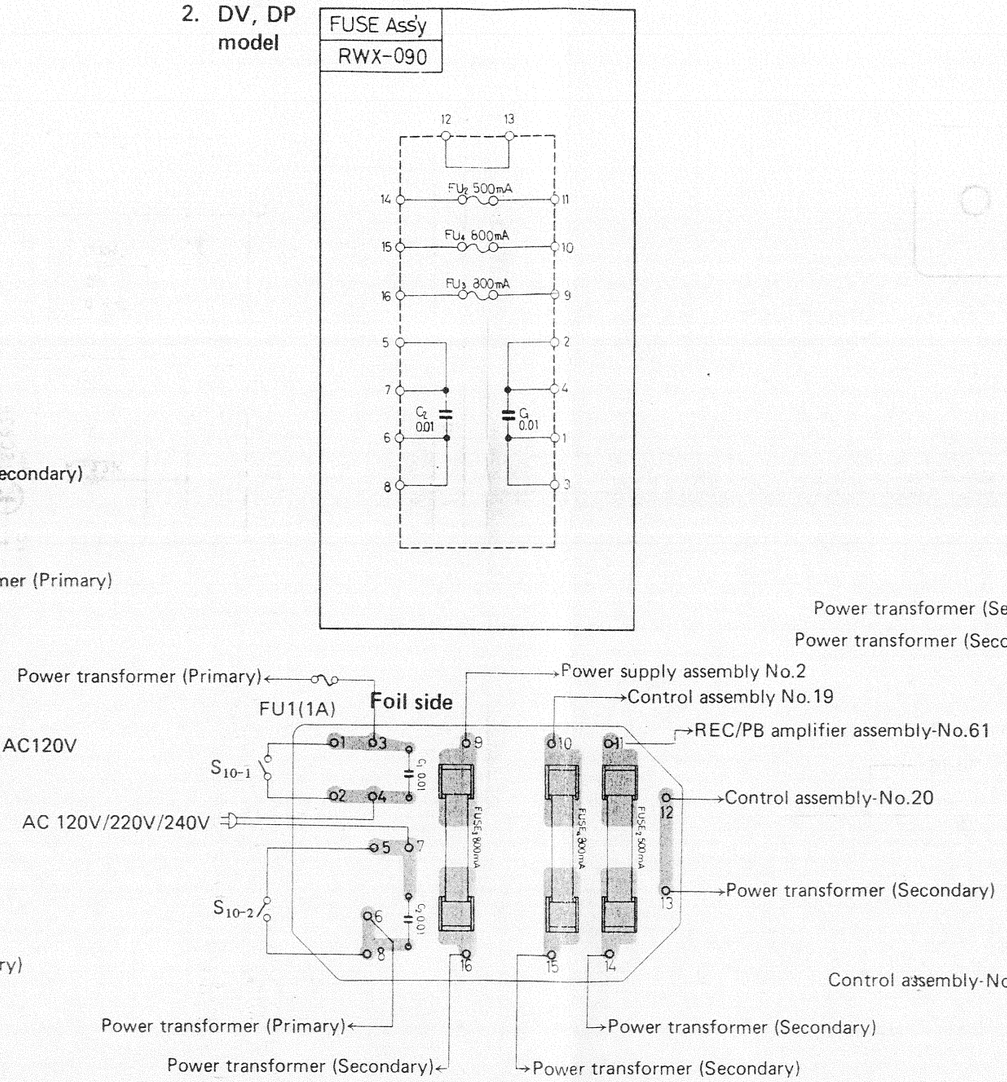

3. NB model

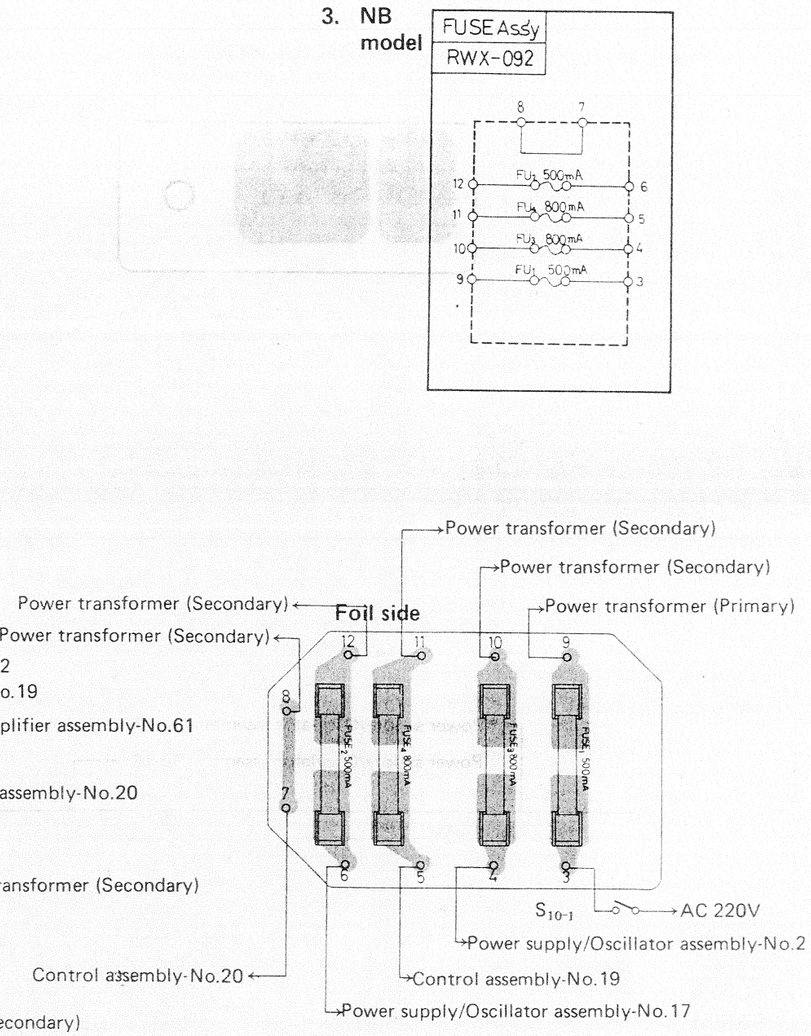

INDICATOR ASSEMBLY (RWX-087)

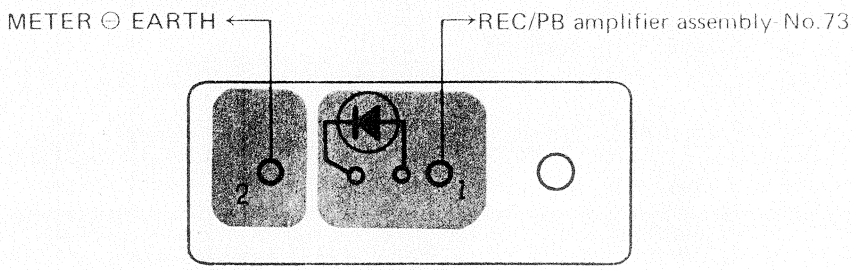

LAMP ASSEMBLY (RWX-052)

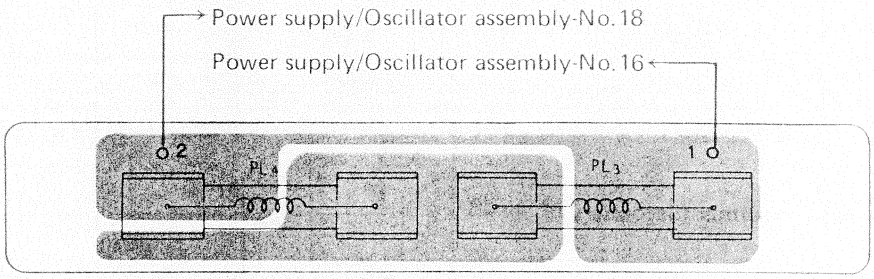

CONTROL ASSEMBLY (RWG-049)

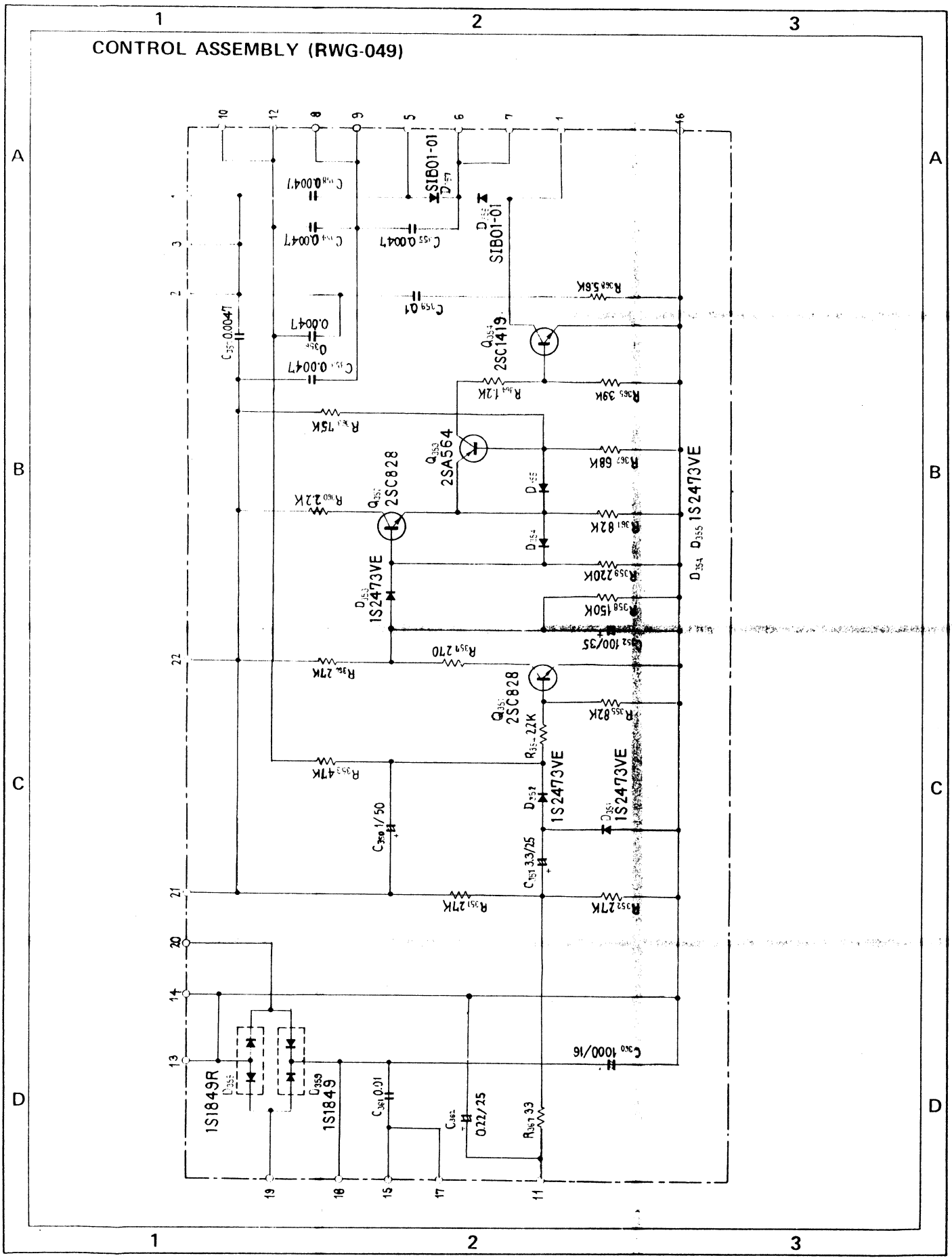

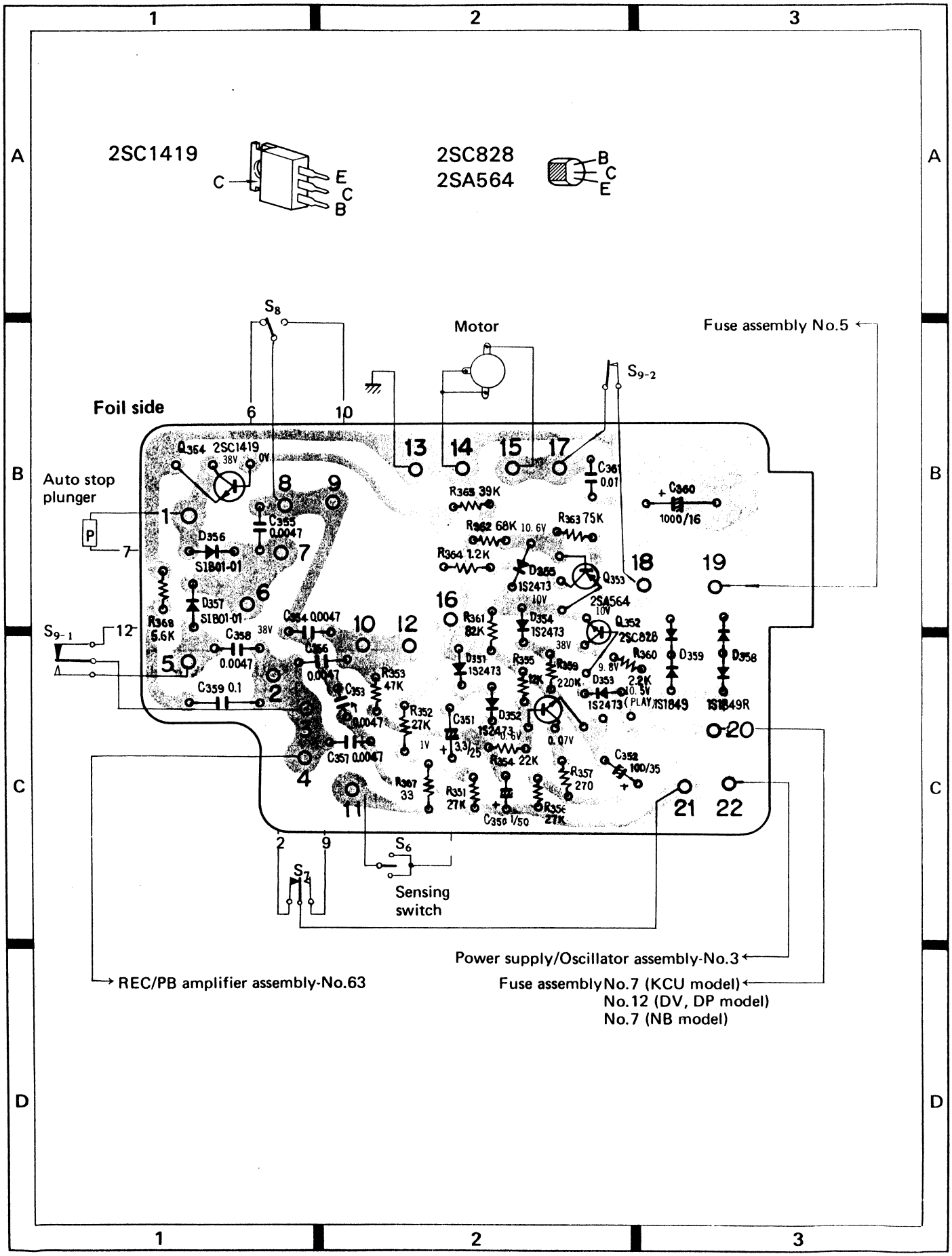
2SC1419
C
E
C
B
2SC828
2SA564
B
C
E
Foil side
Motor
Fuse assembly No.5
Auto stop plunger
Sensing switch
Power supply/Oscillator assembly-No.3
REC/PB amplifier assembly-No.63
Fuse assembly No.7 (KCU model)
No.12 (DV, DP model)
No.7 (NB model)

PANEL STAY

NOTE:
Parts indicated in green type cannot be supplied.

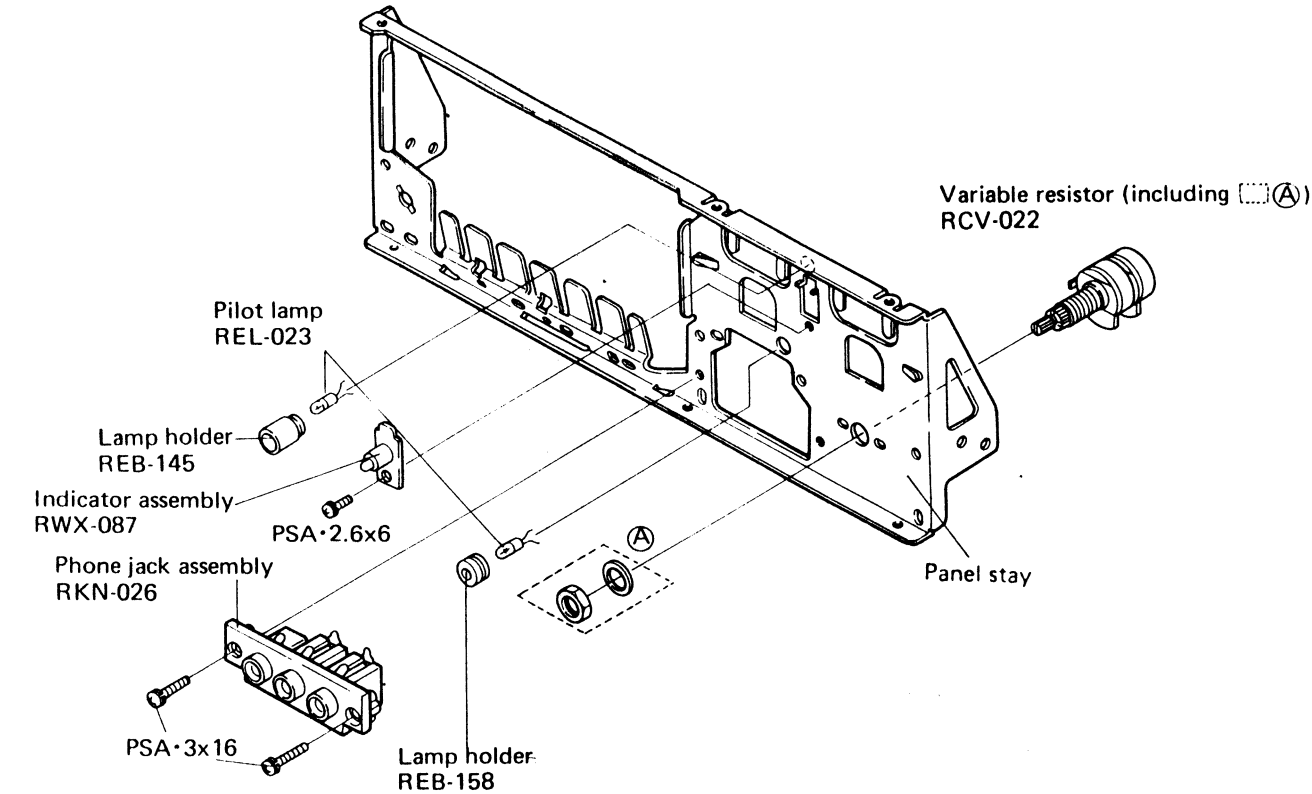

REAR PANEL

NOTE:
Parts indicated in green type cannot be supplied.

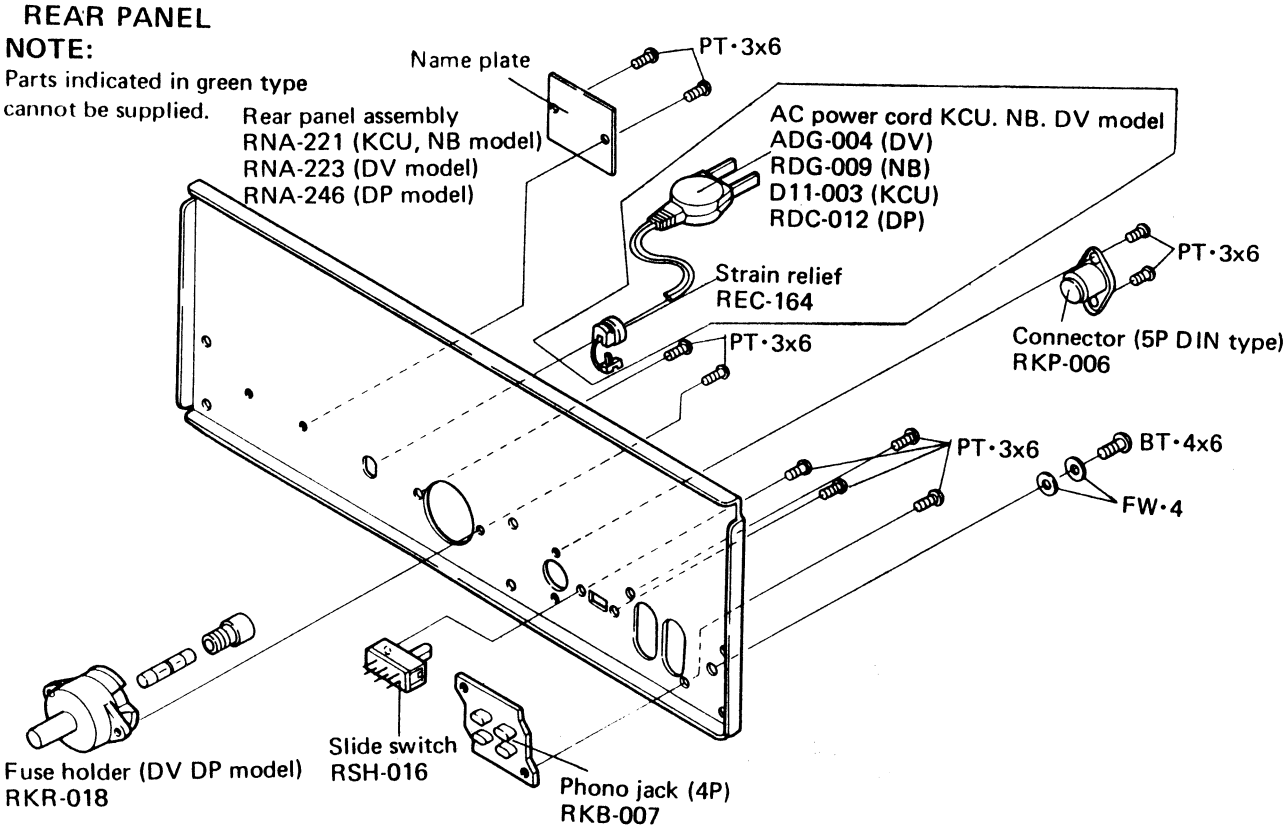

EXPLODED VIEW

NOTE:
Parts indicated in green type cannot be supplied.

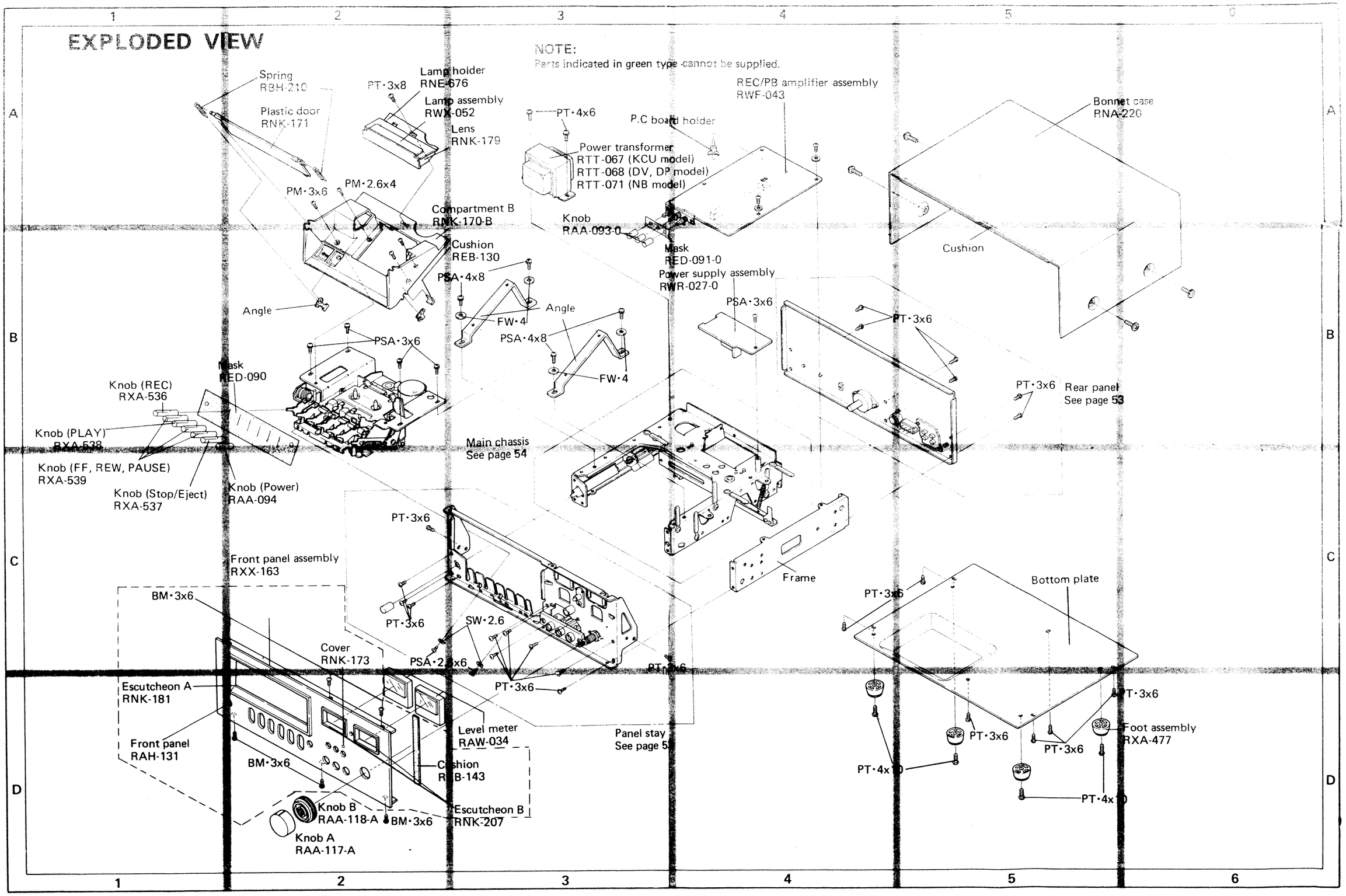

EXPLODED VIEW TRANSPORT

NOTE:
Parts indicated in green type cannot be supplied.

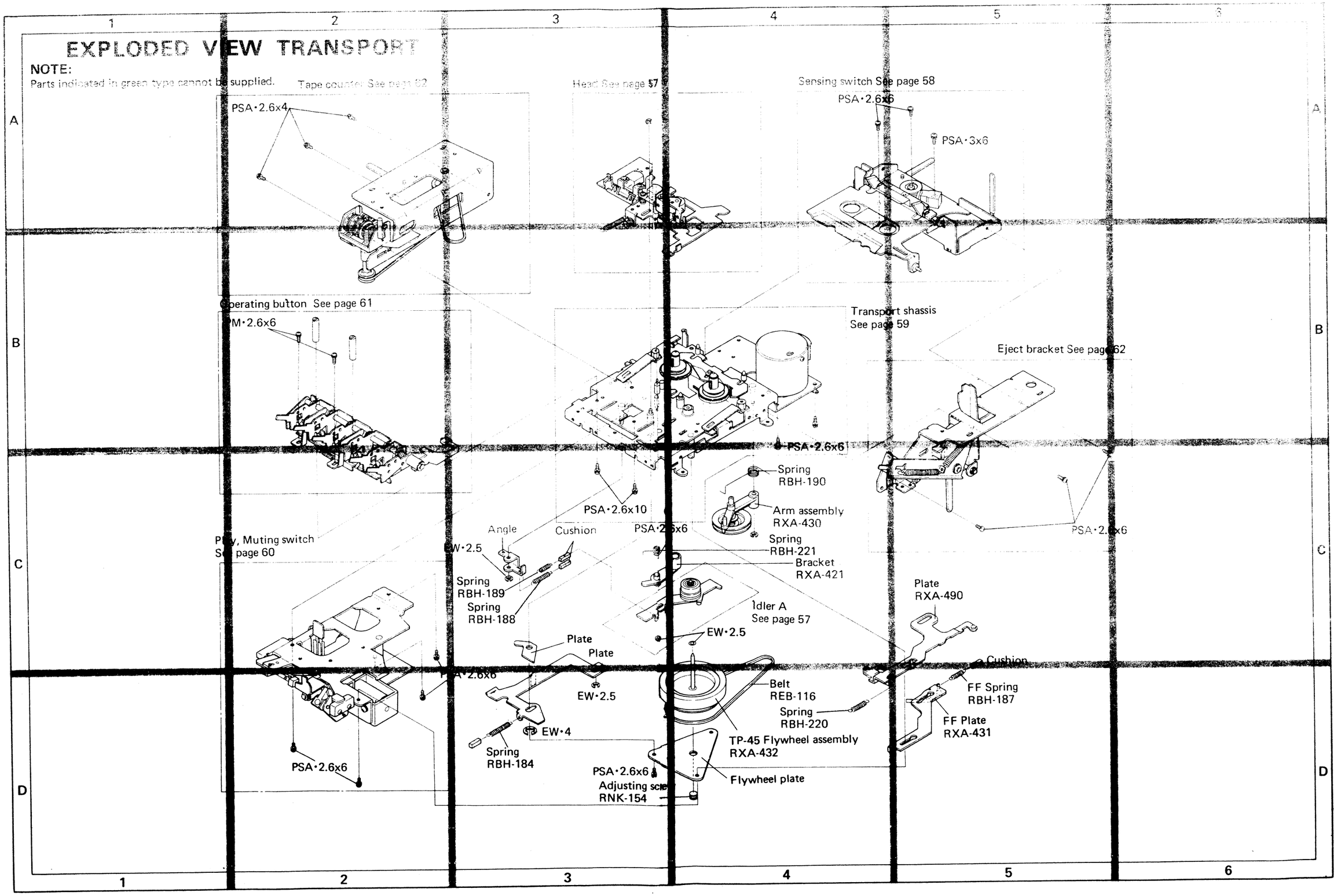

MAIN CHASSIS

NOTE:

Parts indicated in green type cannot be supplied.

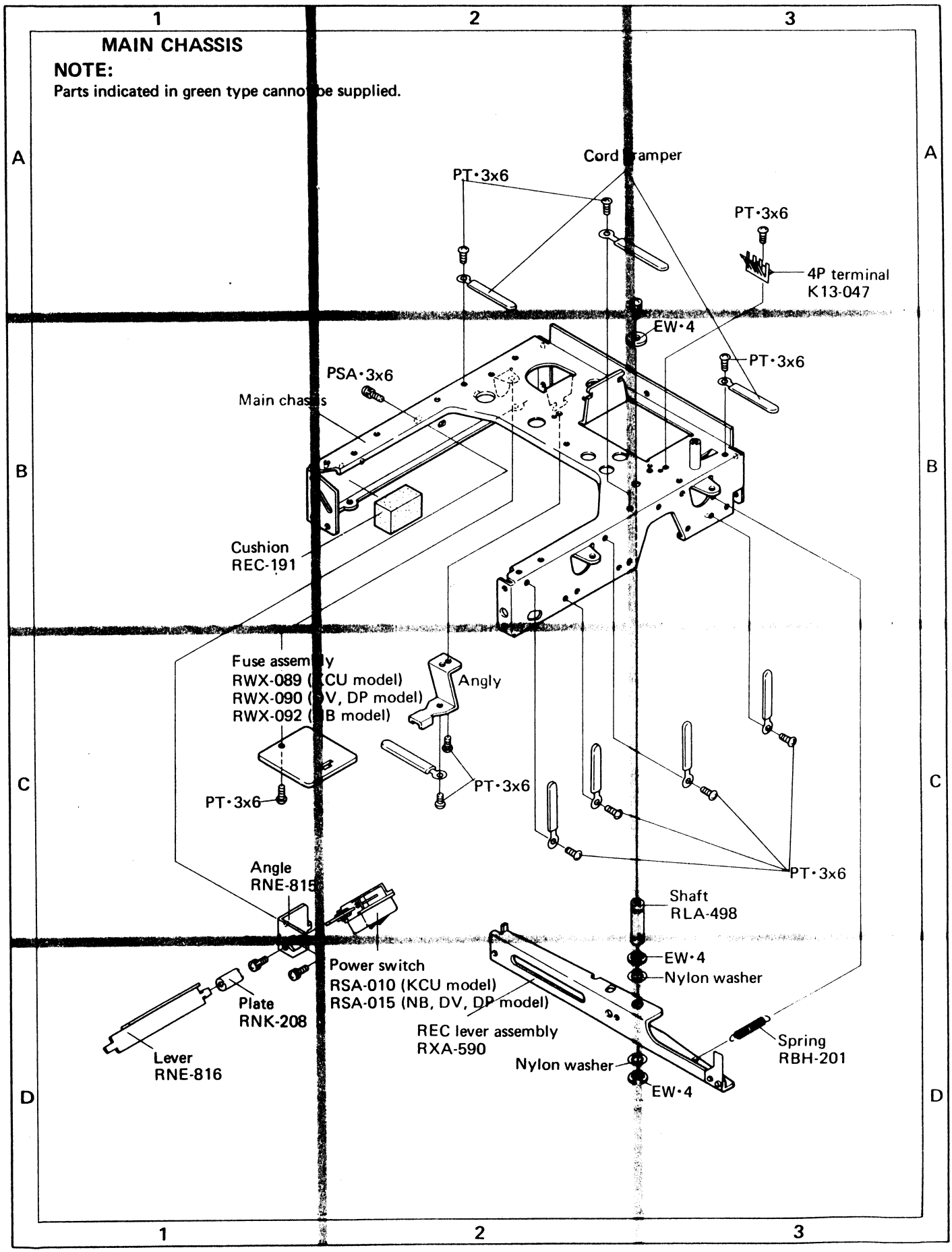

HEAD

NOTE:
Parts indicated in green type cannot be supplied.

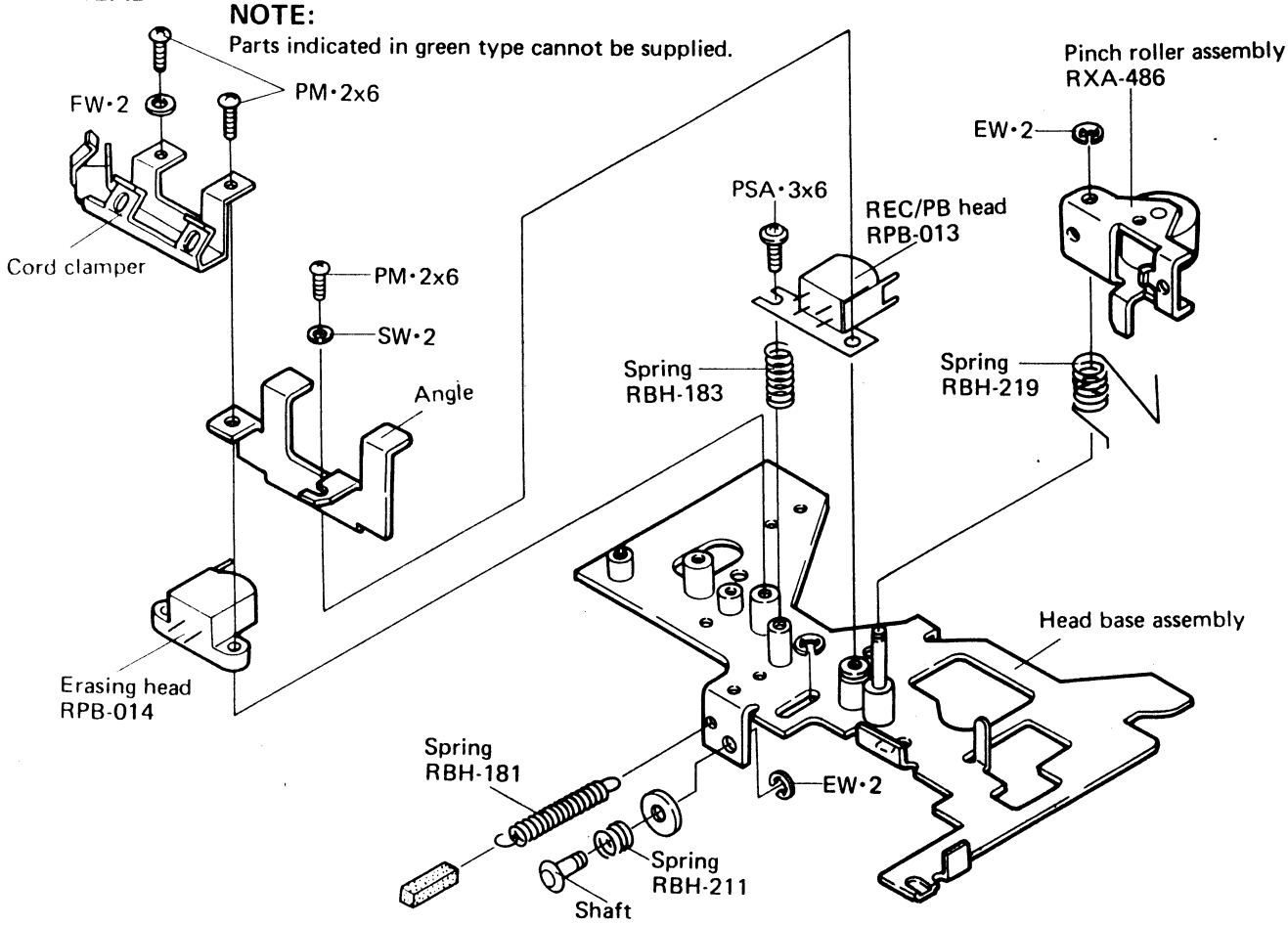

IDLER A

NOTE:
Parts indicated in green type cannot be supplied.

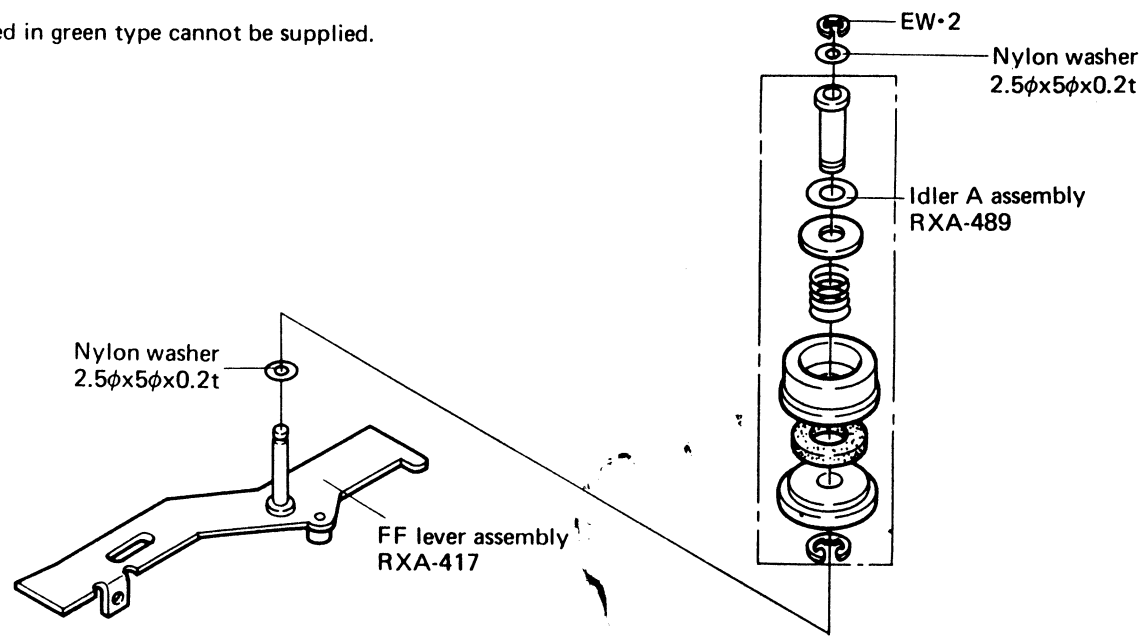

SENSING SWITCH

NOTE:

Parts indicated in green type cannot be supplied.

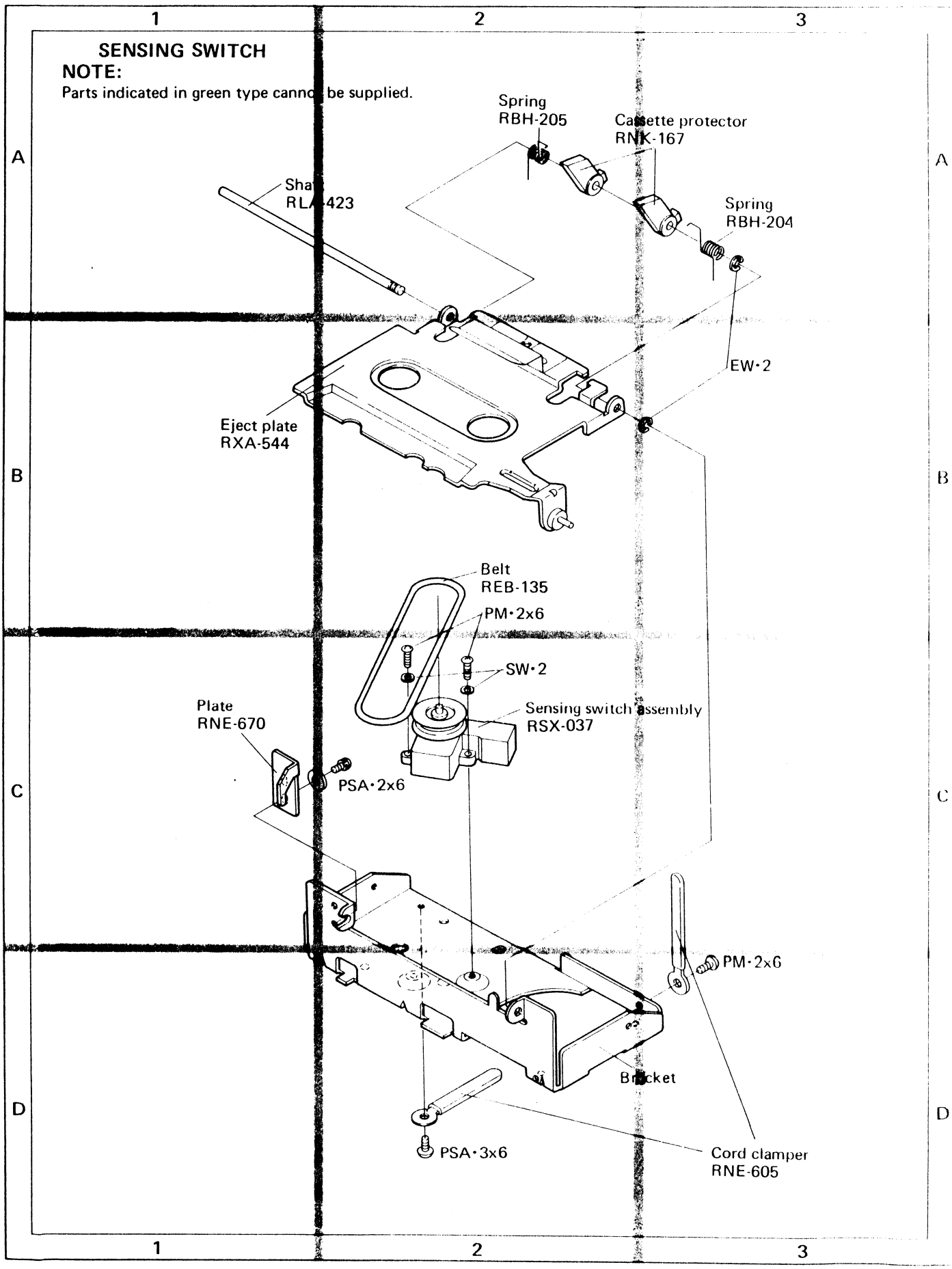

TRANSPORT CHASSIS

NOTE:

Parts indicated in green type cannot be supplied.

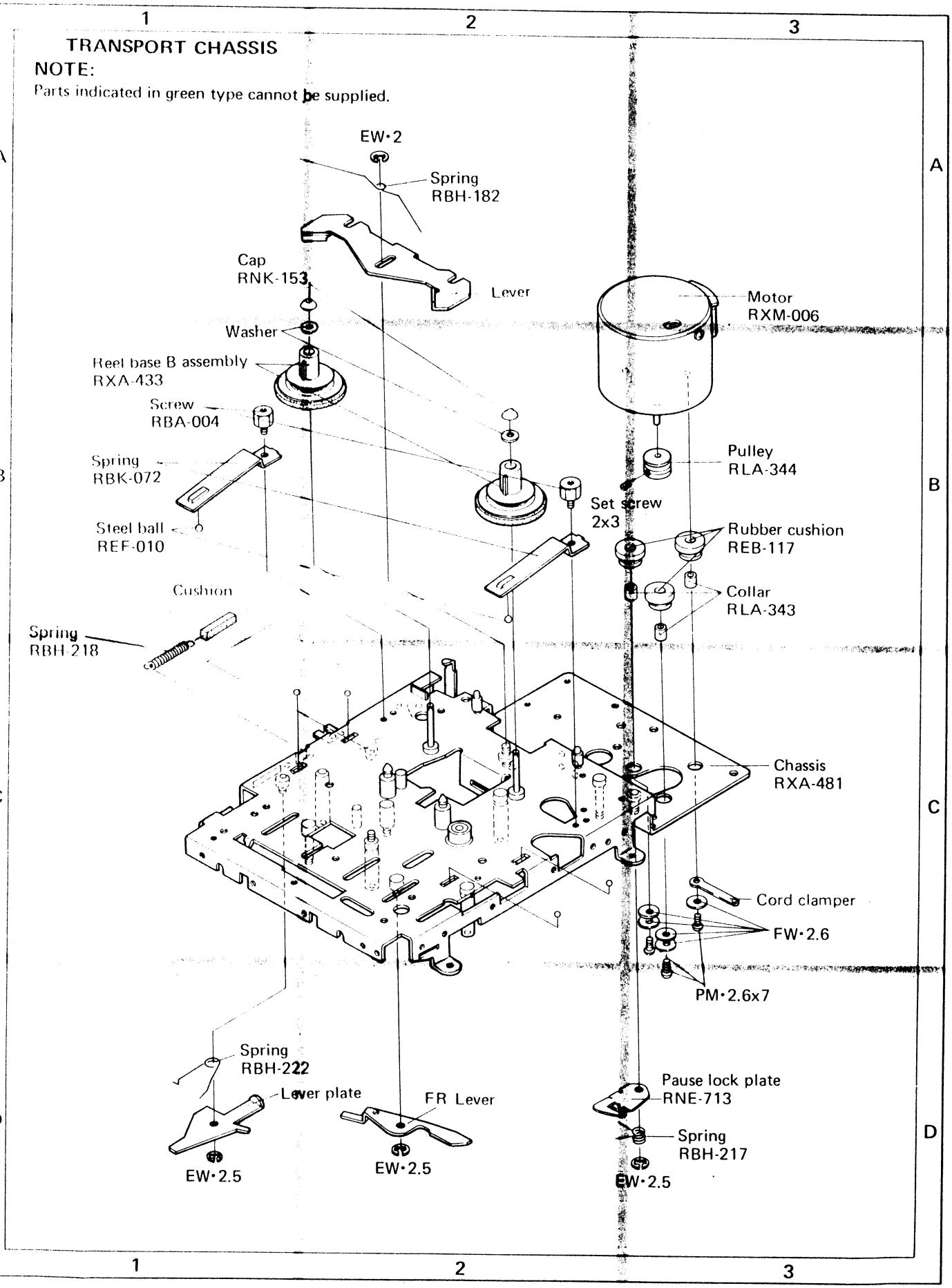

PLAY, MUTING SWITCH

NOTE:
Parts indicated in green type cannot be supplied.

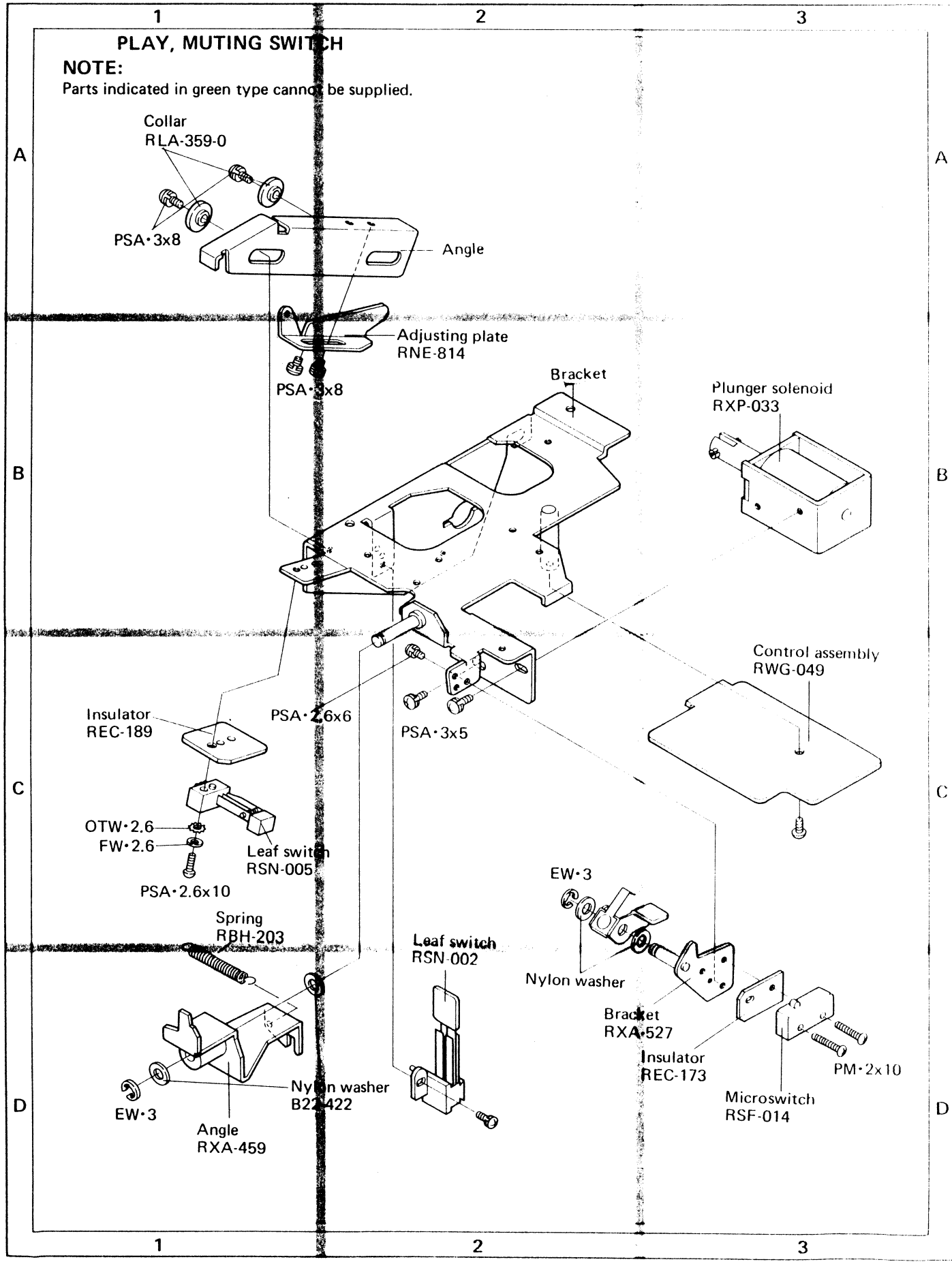

OPERATING BUTTON ASSEMBLY (RXA-498)

NOTE:
Part indicated in green type cannot be supplied.

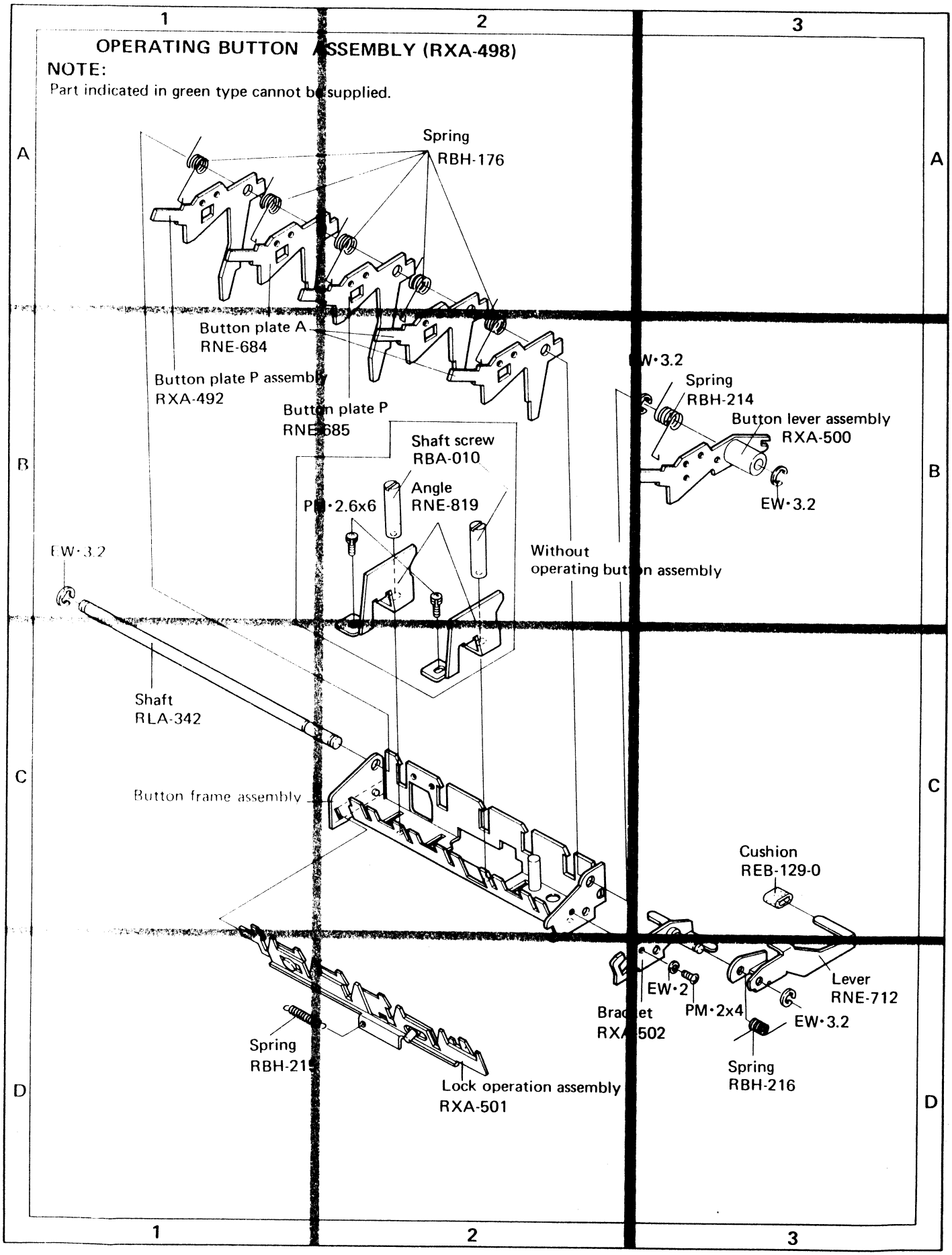

TAPE COUNTER

NOTE:

Parts indicated in green type cannot be supplied.

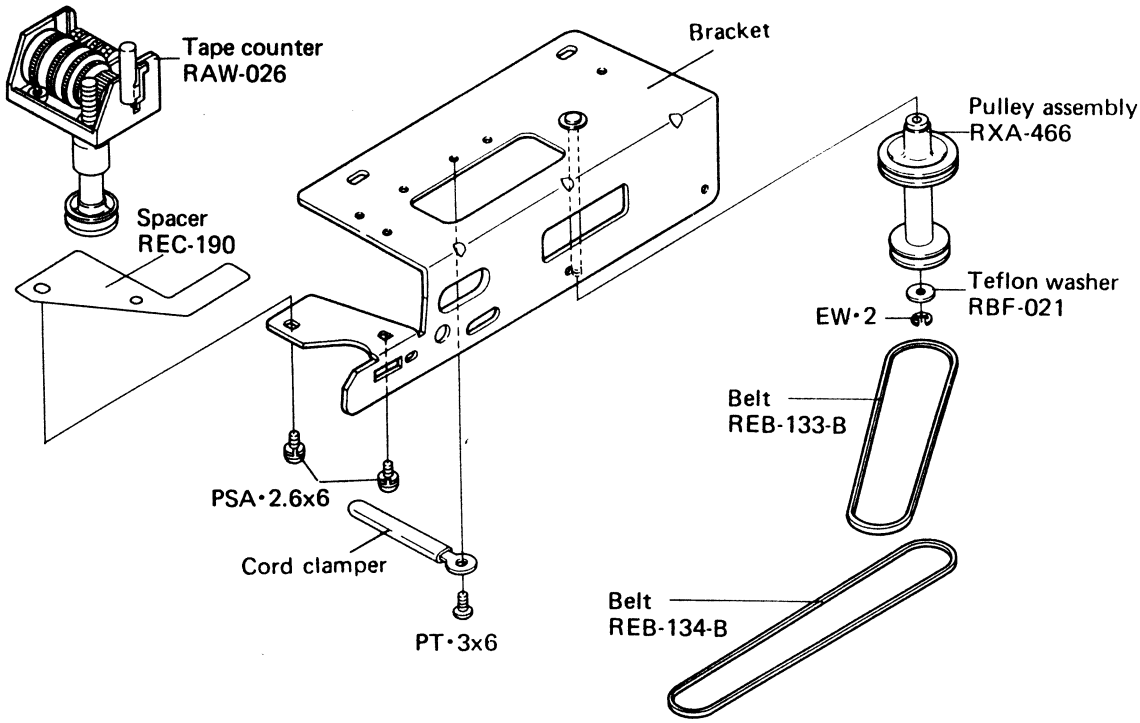

EJECT BRACKET

NOTE:

Parts indicated in green type cannot be supplied.

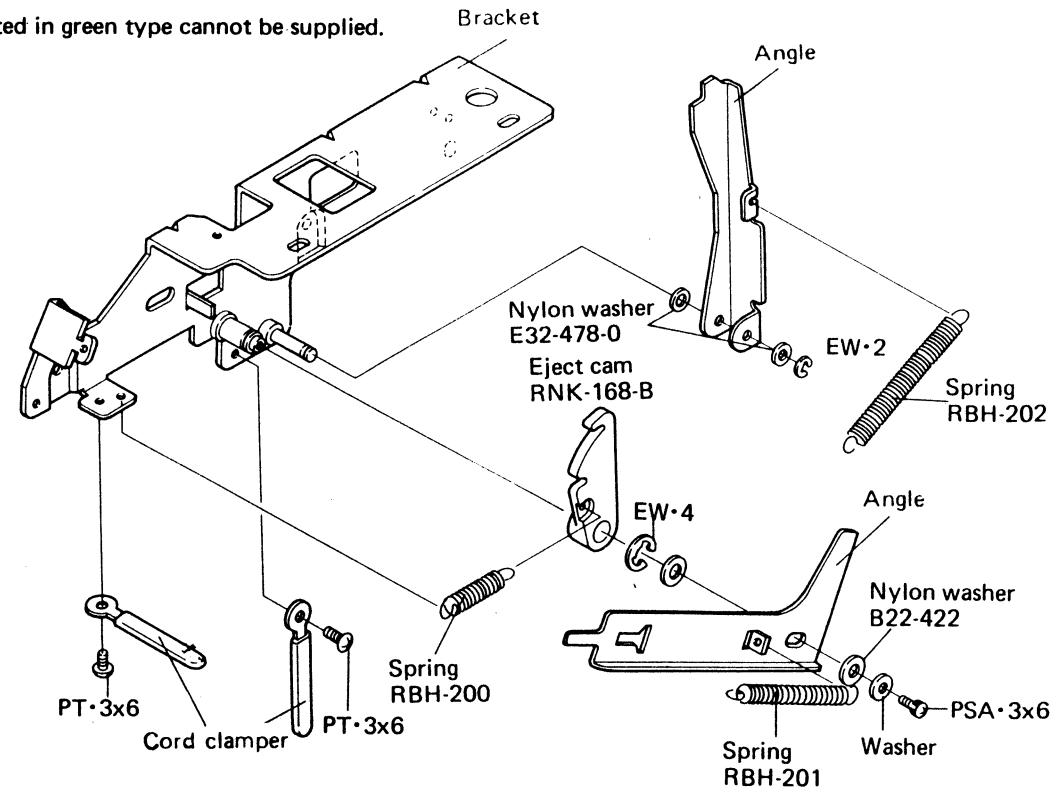

CASSETTE TAPE DECK

CT-F2121

NB, DV, DP

<ART-186-0>

Additional

Service Manual

Employ this additional service manual for the units with serial numbers indicated in the table.

For detailed please refer to the Service Manual of CT-F2121/KCU, NB, DV, DP.

Model	Serial No.
NB	4206301 ~
DV	9425701 ~
DP	9512801 ~

PIONEER®

1. ADJUSTMENTS

1.1 MUTING SWITCH ADJUSTMENT

When PLAY button is pressed, perform adjustment so that configuration shown in Fig. A-1 is obtained after contact 1 in Fig. A separates from contact 2.

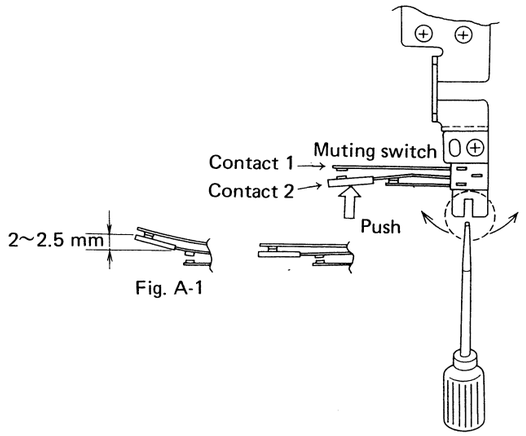

Fig. A-1

Fig. A

1.2 MOTOR SWITCH ADJUSTMENT

Set all FUNCTION buttons to OFF positions. Perform adjustment so that space A shown in Fig. B becomes 0.05 ~ 0.15 mm.

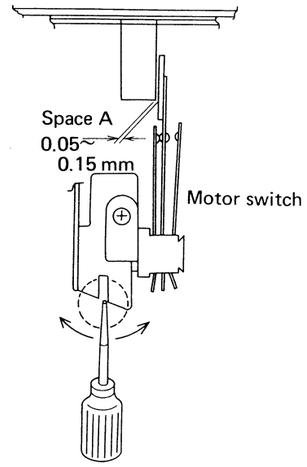

Fig. B

2. EXPLODED VIEW TRANSPORT

NOTE:

Parts indicated in green type cannot be supplied.

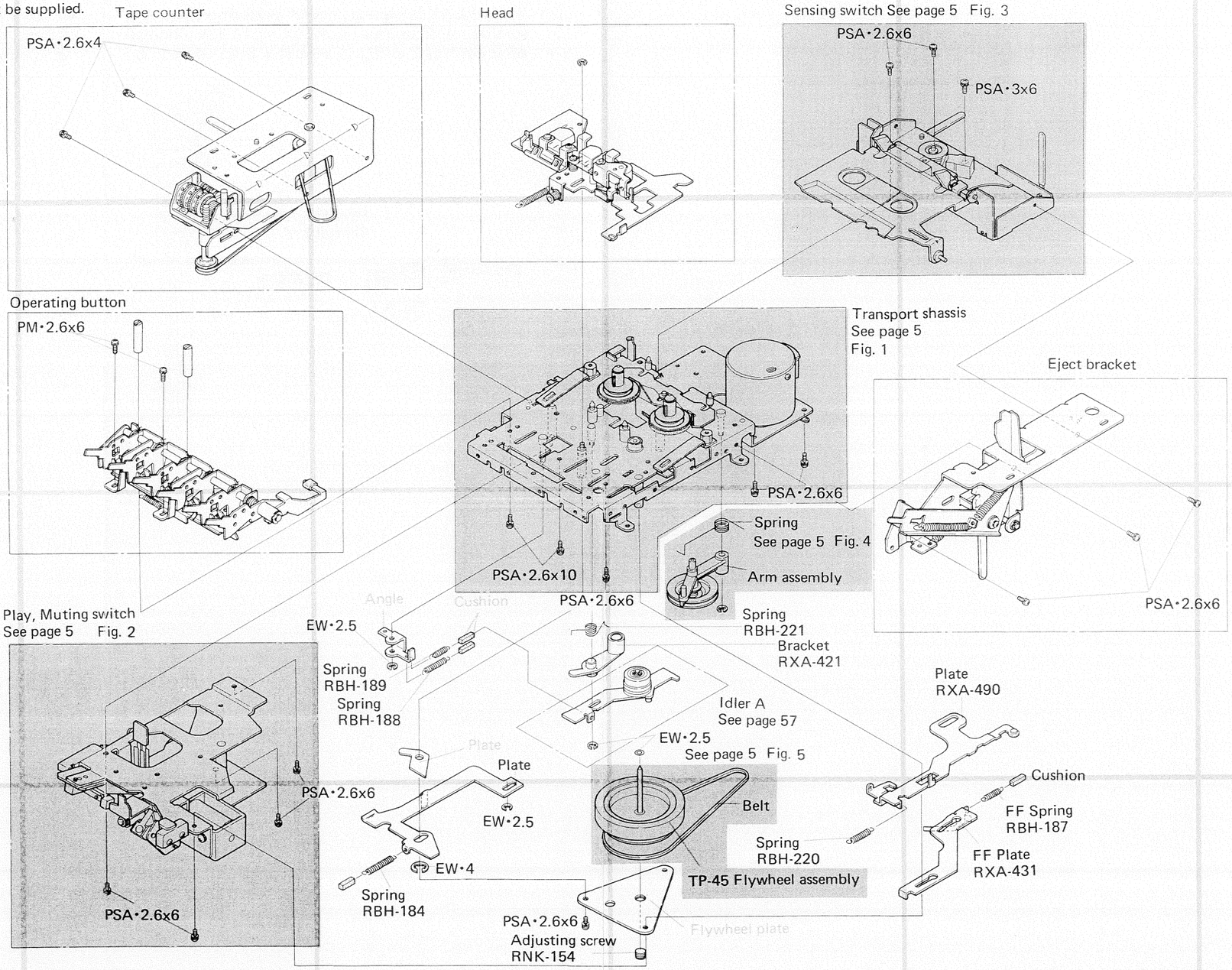

Components of section indicated by orange color have been changed.

Transport shassis See page 6

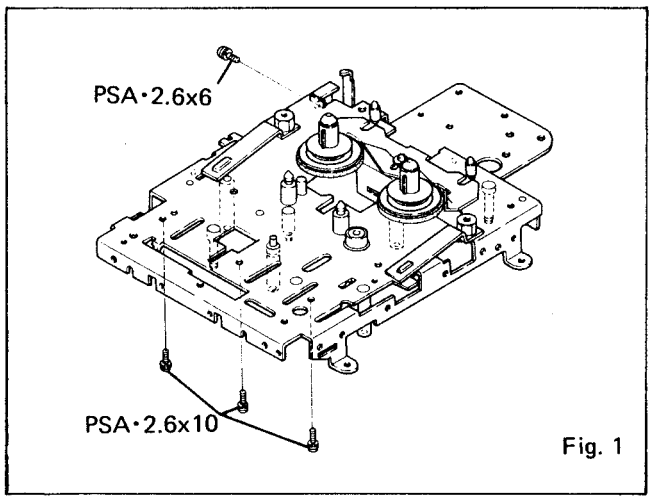

Fig. 1

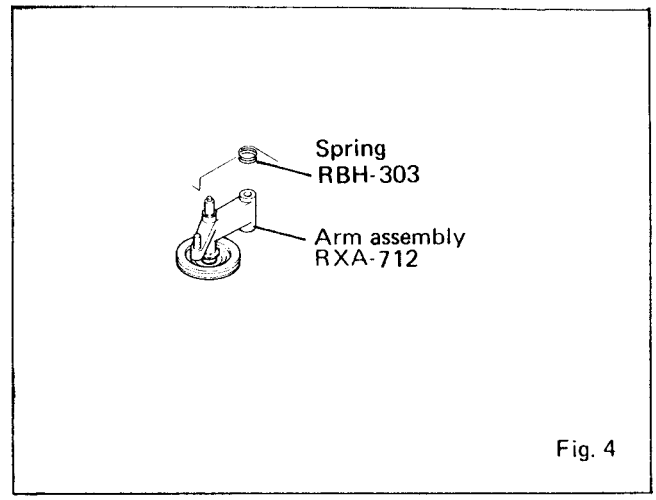

Fig. 4

Play, Muting switch See page 7

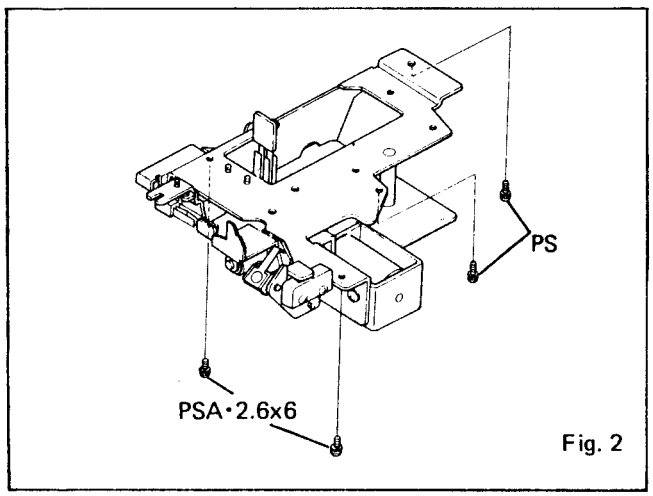

Fig. 2

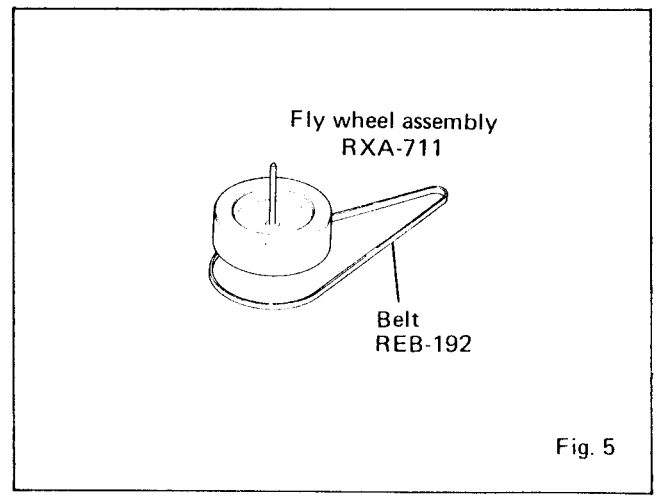

Fig. 5

Sensing switch, Motor See page 8

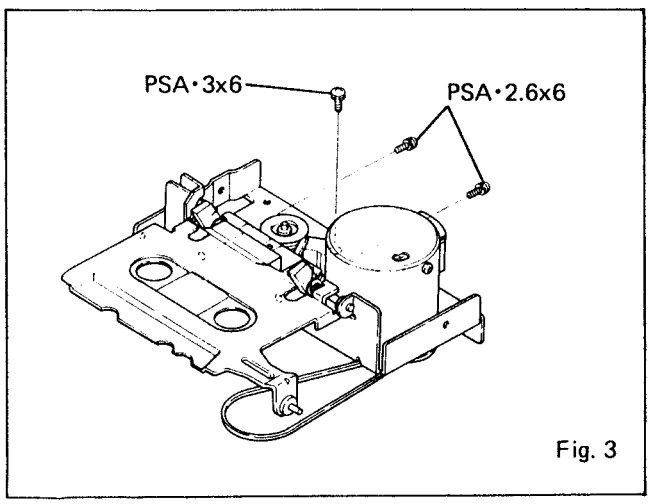

Fig. 3

2.1 TRANSPORT CHASSIS

The parts indicated by designation and part numbers are newly-employed in the NB, DV, DP model.
The parts without description are the same as the parts in the K model.

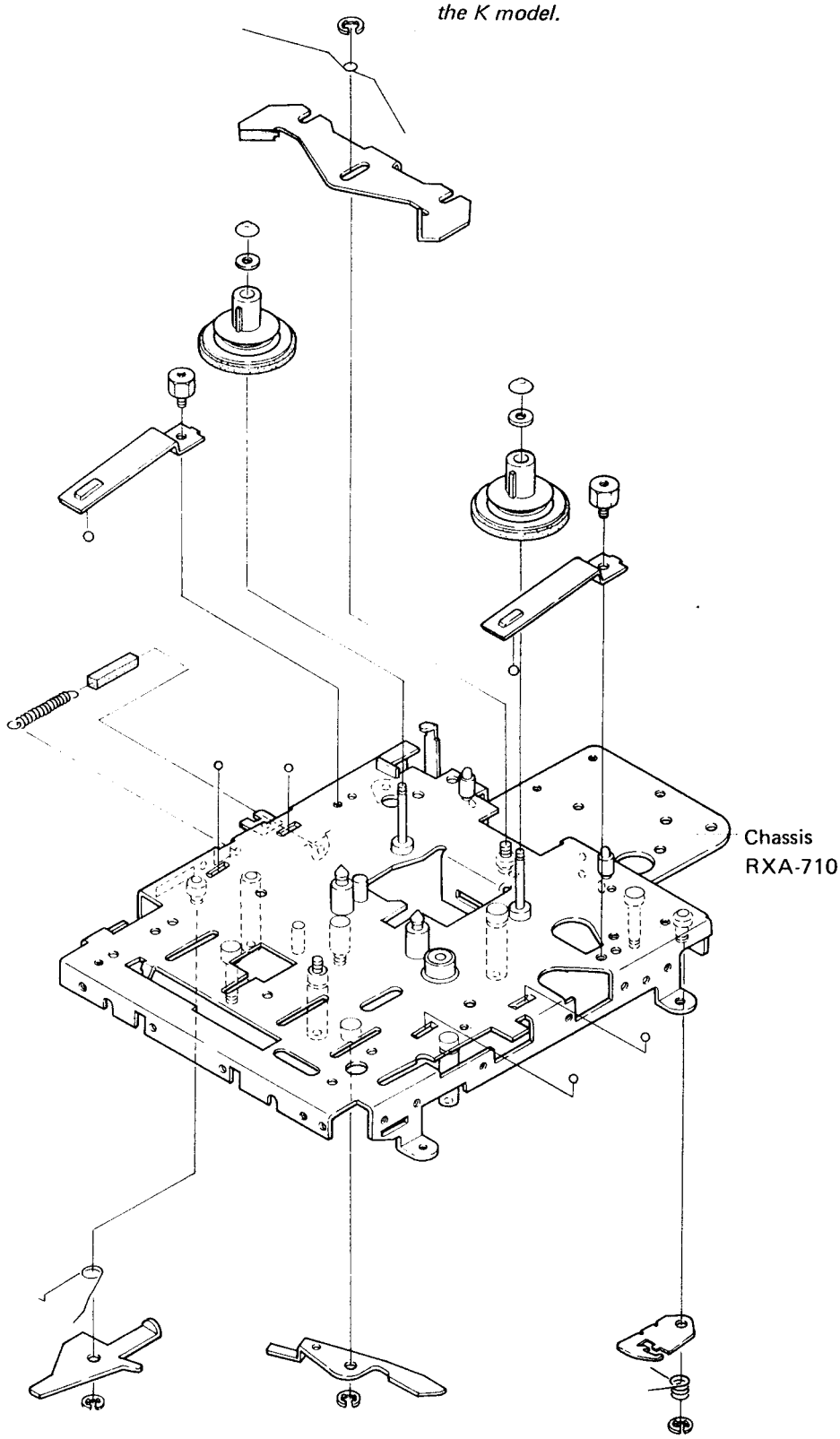

2.2 PLAY MUTING SWITCH

The parts indicated by designation and part numbers are newly-employed in the NB, DV, DP model.
The parts without description are the same as the parts in the K model.

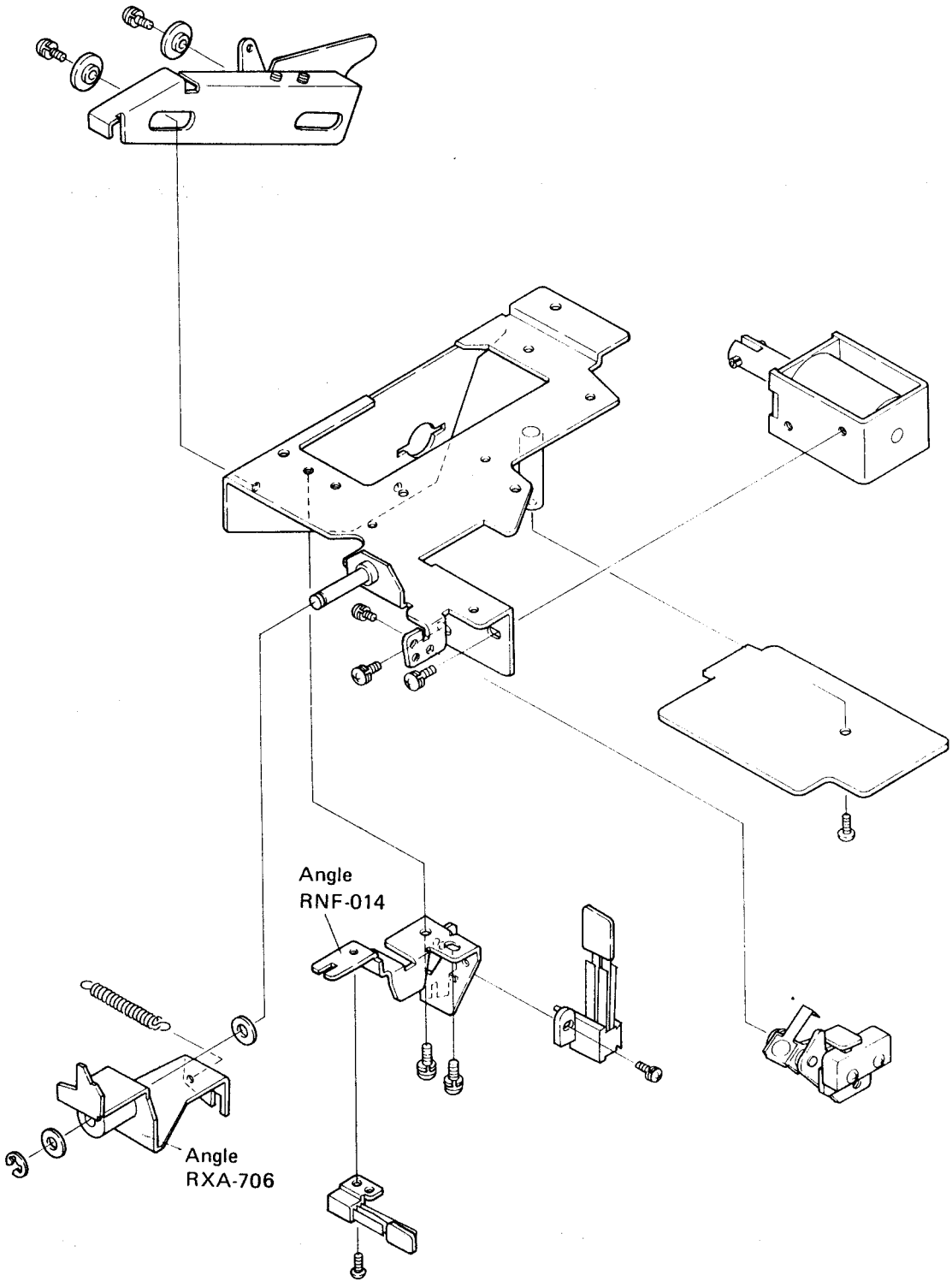

2.3 SENSING SWITCH MOTOR

The parts indicated by designation and part numbers are newly-employed in the NB, DV, DP model.
The parts without description are the same as the parts in the K model.

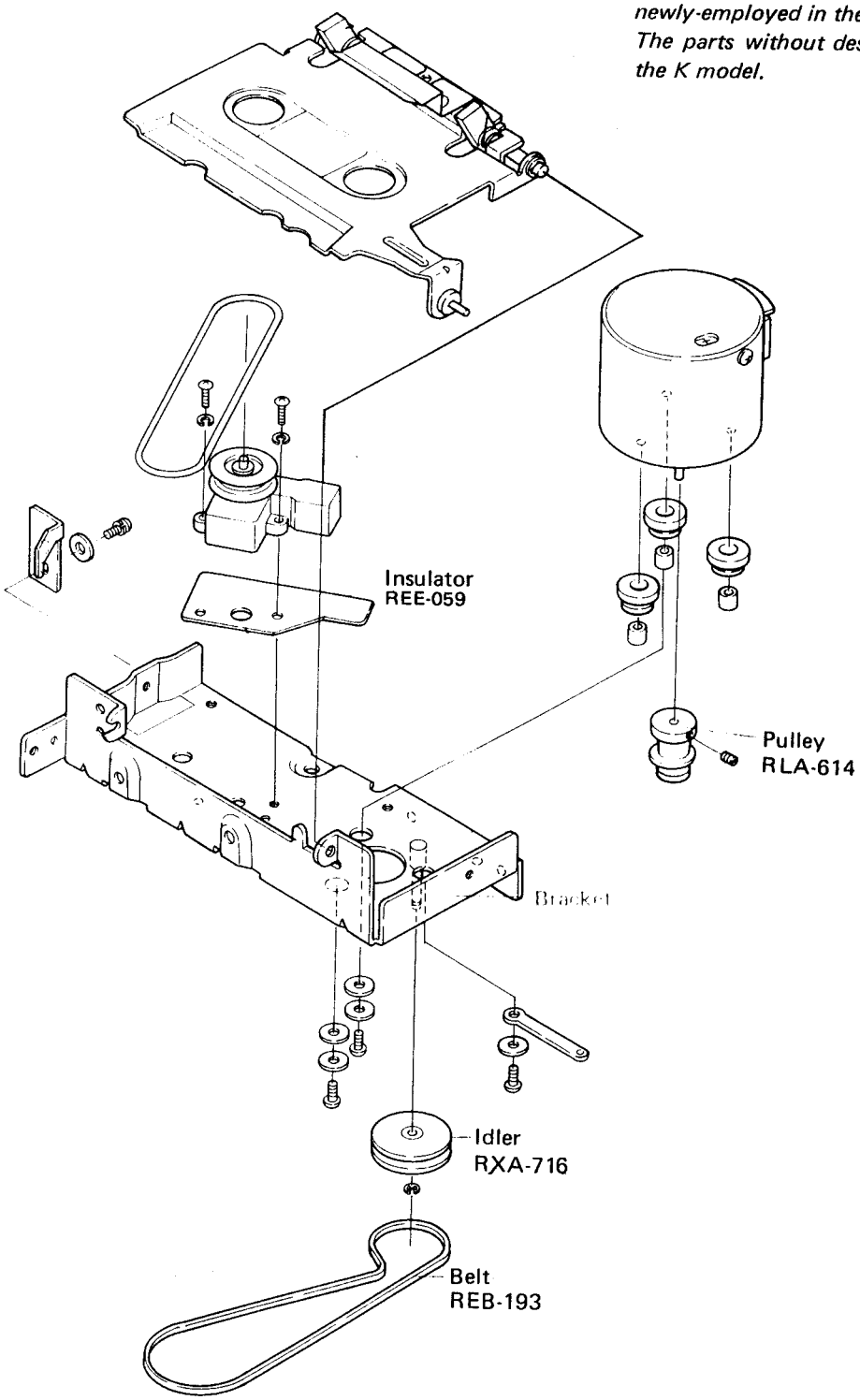

PIONEER ELECTRONIC CORPORATION
4-1, Meguro 1-Chome, Meguro-ku, Tokyo 153, Japan
U.S. PIONEER ELECTRONICS CORPORATION
75 Oxford Drive, Moonachie, New Jersey 07074, U.S.A.
PIONEER ELECTRONIC (EUROPE) N.V.
Luithagensteenweg no. 9, 2030 Antwerp, Belgium
PIONEER ELECTRONICS AUSTRALIA PTY. LTD.
178-184 Boundary Road, Braeside, Victoria 3195, Australia

<76F01Y51K>

©JUNE 1976

Printed in Japan